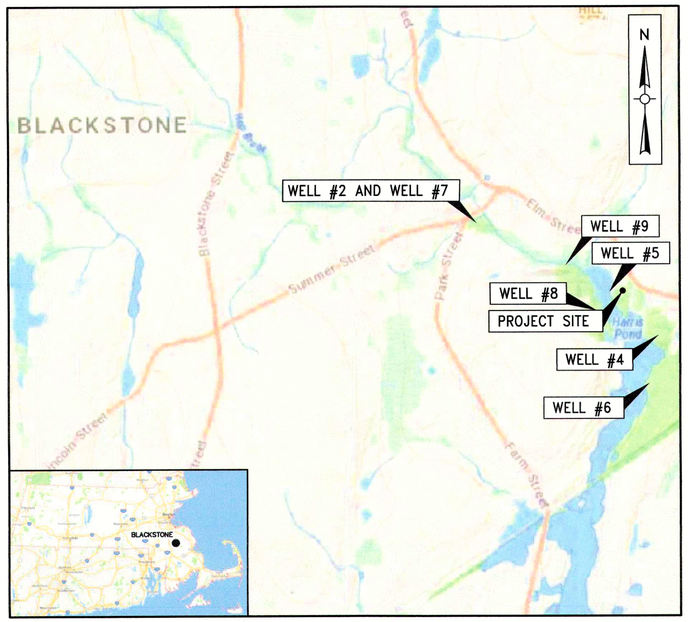

SCALE: 1"=1750'

TOWN OF BLACKSTONE, MASSACHUSETTS

DEPARTMENT OF PUBLIC WORKS

WATER TREATMENT PLANT

WATER & SEWER COMMISION

BRUCE PATERSON – BOARD CHAIRMAN

ROB PATERSON – VICE CHAIRMAN

ANITA ROBERTSON – CLERK

TOMMY DEVLIN – MEMBER

ROY GREENHALGH – MEMBER

BOARD OF SELECTMEN

ROBERT J. DUBOIS – BOARD CHAIRMAN

ROBERT KLUCHEVITZ – VICE CHAIRMAN

MARY BULSO – CLERK

TANYA POLAK – SELECTMEN

RYAN CHAMBERLAND – SELECTMEN

JAMES SULLIVAN – DPW DIRECTOR

CONTRACT 2020-1

DWSRF #6686

COMMONWEALTH OF MASSACHUSETTS
JEFFREY W. McCLURE
CIVIL
No. 41836
REGISTERED PROFESSIONAL ENGINEER
5-21-2021

JULY 2021

Weston & Sampson SM

Weston & Sampson Engineers, Inc.
55 Walkers Brook Drive, Reading, MA 01867

File No.

COPYRIGHT 2021 WESTON & SAMPSON

DRAWING INDEX

SHEET NO.	TITLE
G000	ABBREVIATIONS, NOTES AND LEGEND
C201	SITE PLAN
C202	SITE PLAN – PIPING
C601	WATER AND SEWER DETAILS
C602	SITE DETAILS
C603	OVERFLOW PIPING DETAILS
G101	CODE SUMMARY
AD101	DEMOLITION PLANS & ELEVATIONS
A011	ABBREVIATIONS, SYMBOLS, LEGEND, AND GENERAL NOTES
A021	GENERAL NOTES AND PARTITION TYPES
A101	OVERALL FLOOR PLANS
A102	OVERALL REFLECTED CEILING PLANS
A103	OVERALL ROOF PLAN & DETAILS
A201	EXTERIOR ELEVATIONS
A232	3D VIEWS
A301	BUILDING SECTIONS
A401	WALL SECTIONS
A501	LARGE SCALE STAIR PLANS/SECTIONS
A601	DETAILS
A801	DOOR SCHEDULE, TYPES, & DETAILS
A802	FENESTRATION DETAILS
A1001	WELL PLANS I
A1002	WELL PLANS II
S001	GENERAL NOTES
S002	GENERAL NOTES II
S003	TYPICAL DETAILS
S100	EXCAVATION PLAN
S101	FOUNDATION PLAN
S111	SLAB PLAN
S121	FRAMING PLAN
S301	STEEL FRAMING SECTIONS
S401	FOUNDATION SECTIONS & DETAILS I
S402	FOUNDATION SECTIONS & DETAILS II
S900	3D VIEWS
H000	MECHANICAL LEGENDS, NOTES, AND ABBREVIATIONS
H100A	HVAC NEW BUILDING BASIN PLAN
H101A	HVAC NEW BUILDING FIRST FLOOR PLAN

SHEET	TITLE
H101C	WELL NO. 2 AND 6 HVAC FLOOR PLAN
H501	HVAC DETAILS
H502	HVAC DETAILS
H601	HVAC SCHEDULES
H701	MECHANICAL AUTOMATIC TEMPERATURE CONTROLS
H702	MECHANICAL AUTOMATIC TEMPERATURE CONTROLS
HD101B	ALTERNATE NO. – 2 EXISTING BUILDING FIRST FLOOR PLAN
D101	CORROSION CONTROL FACILITY PLAN
D201	FILTER PLAN
D202	PIPE GALLERY PLAN
D401	FILTER FACE PIPING
D402	BACKWASH AND RECYCLE WATER SECTION
D601	CHEMICAL FEED DETAILS
D602	CHEMICAL FEED SCHEMATIC
D603	PROCESS FLOW DIAGRAM
P000	PLUMBING LEGEND, ABBREVIATIONS, AND NOTES
P100A	NEW BUILDING PLUMBING BASIN PLAN
P101A	NEW BUILDING FIRST FLOOR PLUMBING PLAN
P501	PLUMBING DETAILS
P601	PLUMBING SCHEDULES
P701	DOMESTIC WATER RISER DIAGRAM AND WASTE AND VENTS RISER DIAGRAM
PD101B	EXISTING BUILDING FLOOR PLAN
E001	ELECTRICAL TITLE SHEET
E002	ELECTRICAL GENERAL NOTES
E003	ELECTRICAL SITE PLAN
E101	ELECTRICAL LIGHTING PLANS
E201	ELECTRICAL POWER PLANS
E202	EXISTING CORROSION CONTROL FACILITY ELECTRICAL PLANS
E401	ELECTRICAL WELL PLANS SHEET I – ALTERNATE NO. 1
E402	ELECTRICAL WELL PLANS SHEET II – ALTERNATE NO. 1
E501	ELECTRICAL DETAILS SHEET I
E502	ELECTRICAL DETAILS SHEET II
E601	ELECTRICAL ONE LINE DIAGRAMS
E602	ELECTRICAL SCHEDULES SHEET I
E603	ELECTRICAL SCHEDULES SHEET II
FA101	FIRE ALARM PLANS
Q000	PROCESS NOTES, ABBREVIATIONS AND LEGEND
Q100	CONTROL NETWORK DIAGRAM
Q111	WTP AND WELLS CONTROL DIAGRAMS I
Q112	WTP AND WELLS CONTROL DIAGRAMS II

\\wes03\conf\WES\Projects\MA\Blackstone MA\122574D WTP Design\CAD\G000.dwg

LEGEND

DESCRIPTION	EXISTING	PROPOSED
SANITARY SEWER	S	8"S PVC
FORCE MAIN	FM	6"FM DI
WATER MAIN	W	6"W DI
TEMPORARY WATER		4"W
STORM DRAIN	D	18"D RCP
GAS	G	4"G
ELECTRIC	E	E
TELEPHONE	T	T
HOUSE CONNECTION		6" HOUSE CONN (TYP)
GRINDER PUMP		GP
SANITARY SEWER MANHOLE	S	SMH
STORM DRAIN MANHOLE	D	SDMH
ELECTRICAL MANHOLE	E	EMH
TELEPHONE MANHOLE	T	TMH
AIR RELEASE VALVE MANHOLE		ARMH
FORCE MAIN CLEANOUT MANHOLE		FMCO
CLEANOUT		CO
CATCH BASIN		CB
CATCH BASIN (CURB INLET)		
HYDRANT		
TEMPORARY HYDRANT		H
GATE VALVE	WV	
CHECK VALVE		
CURB STOP		
BUTTERFLY VALVE		
BALL VALVE		
REDUCER		
CAP OR PLUG		
GAS GATE VALVE	GV	
UTILITY POLE		
GUY POLE		
LIGHT POST		
EDGE OF PAVEMENT		
EDGE OF UNPAVED ROAD		
CURB		
SIDEWALK		
RAILROAD		
STONE WALL		
RETAINING WALL	RET WALL	RET WALL
FENCE	x x	x x
INDIVIDUAL DECIDUOUS TREE		
INDIVIDUAL EVERGREEN TREE		
TREE LINE		
SURVEY MARKER		
PROPERTY LINE	PL	
EASEMENT LINE		
LIMIT OF WORK		
APPROX. LIMIT OF REFUSE		
SPOT ELEVATIONS	x 141.5	x141.5
CONTOUR LINES	56	56
DEPRESSION CONTOUR LINES		
HOUSE NUMBER	#35	
FLOOR ELEVATION	FL=56.7	
SILL ELEVATION	S=56.7	
WETLAND		
WETLAND FLAGS		1 2
RIP RAP		
STATE HIGHWAY STATION		
SURFACE MOUNTED DELINEATOR		
GUARD POST		
BOLLARD	B	B
SIGN		
BENCH MARK		
AUGER	A-1	A-1
PERCOLATION TEST	PT 1	PT-1
TEST PIT	TP 1	TP-1
BORING	B-10	B-11
PROBE	P-10	P-11
GROUNDWATER MONITORING WELL	WS-1	WS-1
GAS MONITORING WELL	GMW-10	GMW-10
GAS VENT	GV	GV
HAY BALES		
ROCK OUTCROP		
DRAINAGE DITCH / SWALE		

NOTE: ITEMS SHOWN IN THE LEGEND MAY NOT BE PRESENT IN THESE PLANS

ABBREVIATIONS

AC	ASBESTOS CEMENT PIPE
ACCMP	ASPHALT COATED CORRUGATED METAL PIPE
ARV	AIR RELEASE VALVE
ASTM	AMERICAN SOCIETY FOR TESTING AND MATERIALS
BC	BITUMINOUS CONCRETE
BIT	BITUMINOUS
BLDG	BUILDING
BM	BENCH MARK
BO	BLOW OFF
BV	BUTTERFLY VALVE
CATV	CABLE TELEVISION
CB	CATCH BASIN
CC	CONCRETE CURB
CI	CAST IRON
℄	CENTERLINE
CL	CEMENT LINED
CMP	CORRUGATED METAL PIPE
CONC	CONCRETE
CU FT	CUBIC FEET
CY	CUBIC YARD
D	STORM DRAIN, DEPTH FROM RIM TO INVERT
DI	DROP INLET, DUCTILE IRON
DIA	DIAMETER
DMH	DRAIN MANHOLE
DWG	DRAWING
E	EAST, ELECTRIC
EA	EACH
EF	EACH FACE
ELEV	ELEVATION
EOP	EDGE OF PAVEMENT
EW	EACH WAY
EXIST	EXISTING
FLG	FLANGE
FT	FEET, FOOT
G	NATURAL GAS
GALV	GALVANIZED
GC	GRANITE CURB
GR	GRANITE
HC	HOUSE CONNECTION
HORIZ	HORIZONTAL
HP	HIGH PRESSURE
HYD	FIRE HYDRANT
I	INVERT
INV	INVERT
ID	INSIDE DIAMETER
IP	IRON PIPE
LB	POUND
LF	LINEAR FEET
LS	LUMP SUM
MAX	MAXIMUM
MB	MAIL BOX
MDC	METROPOLITAN DISTRICT COMMISSION
MDPW	MASSACHUSETTS DEPARTMENT OF PUBLIC WORKS
MECH	MECHANICAL
MH	MANHOLE
MassDOT	MASSACHUSETTS DEPARTMENT OF TRANSPORTATION
MIN	MINIMUM
MISC	MISCELLANEOUS
MJ	MECHANICAL JOINT
MWRA	MASSACHUSETTS WATER RESOURCES AUTHORITY
N	NORTH
NE	NORTH EAST
NW	NORTH WEST
NF	NOT FOUND
NO OR #	NUMBER
OD	OUTSIDE DIAMETER
PCCP	PRESTRESSED CONCRETE CYLINDER PIPE
PE	PLAIN END, POLYETHYLENE
ℙ	PROPERTY LINE
PL	PLATE
PVC	POLYVINYL CHLORIDE
PVMT	PAVEMENT
RCP	REINFORCED CONCRETE PIPE
ROW	RIGHT-OF-WAY
RQD	ROCK QUALITY
S	SEWER, SOUTH
SE	SOUTH EAST
SECT	SECTION
SF	SQUARE FEET
SHT	SHEET
SPEC	SPECIFICATIONS
SQ FT	SQUARE FEET
SS	SEWER SERVICE, STAINLESS STEEL
STA	STATION
STL	STEEL
SW	SIDEWALK, SOUTH WEST
T	HYDROSTATIC THRUST, TELEPHONE
TBM	TEMPORARY BENCH MARK
THK	THICK (NESS)
TYP	TYPICAL
UP	UTILITY POLE
VC	VITRIFIED CLAY
VERT	VERTICAL
W	WATER, WEST
W/	WITH
W/O	WITHOUT

CONSTRUCTION NOTES

1. THE CONTRACTOR SHALL CALL DIGSAFE AT 1-888-344-7233 AND CITY/TOWN DEPARTMENTS AS APPROPRIATE AT LEAST 72 HOURS, SATURDAYS, SUNDAYS, AND HOLIDAYS EXCLUDED, PRIOR TO EXCAVATING AT ANY LOCATION. A COPY OF THE DIGSAFE PROJECT REFERENCE NUMBER(S) SHALL BE GIVEN TO THE OWNER PRIOR TO EXCAVATION.
2. LOCATIONS OF EXISTING PIPES, CONDUITS, UTILITIES, FOUNDATIONS AND OTHER UNDERGROUND OBJECTS ARE NOT WARRANTED TO BE CORRECT AND THE CONTRACTOR SHALL HAVE NO CLAIM ON THAT ACCOUNT SHOULD THEY BE OTHER THAN SHOWN.
3. TEST PITS TO LOCATE EXISTING UTILITIES MAY BE ORDERED BY THE ENGINEER TO DETERMINE WHETHER TO RAISE OR LOWER THE PROPOSED WATER MAIN TO CLEAR EXISTING UTILITIES OR VERIFY EXISTING UTILITY LOCATION, SIZE AND TYPE.
4. ALL PAVEMENT DISTURBED BY THE CONTRACTOR'S OPERATIONS SHALL BE REPLACED IN ACCORDANCE WITH THE SPECIFICATIONS AND AS SHOWN ON THE DRAWINGS.
5. ALL AREAS DISTURBED BY THE CONTRACTOR BEYOND PAYMENT LIMITS SHALL BE RESTORED AT NO ADDITIONAL COST TO THE OWNER.
6. UNLESS OTHERWISE INDICATED, CONCRETE USED FOR PIPE ANCHOR BLOCKS, BACKING, PIPE CRADLES, ARCHES, AND FILL SHALL HAVE A MINIMUM COMPRESSIVE STRENGTH OF 3000 PSI AT 28 DAYS.
7. APPROVED JOINT RESTRAINT METHODS SHALL BE PROVIDED FOR WATER MAINS WHERE ANY BENDS, TEES, PLUGS, OR WYES ARE INSTALLED. CONCRETE THRUST BLOCKS, ANCHOR BLOCKS AND TIE RODS MAY BE USED FOR 6-INCH AND 8-INCH PIPE WHERE JOINT RESTRAINT IS NOT FEASIBLE UPON APPROVAL OF THE ENGINEER. SEE TABLE 1 DETAIL FOR REQUIRED RESTRAINING LENGTHS AND SPECIFICATIONS FOR ADDITIONAL INFORMATION.
8. THE CONTRACTOR SHALL NOT STORE ANY APPARATUS, MATERIALS, SUPPLIES, OR EQUIPMENT ON DRAINAGE STRUCTURES OR WITHIN 100 FEET OF WETLANDS.
9. NEW WATER MAINS AND SERVICES SHALL BE INSTALLED AT THE MINIMUM DEPTH FROM FINISH GRADE TO TOP OF PIPE AS SHOWN ON THE DRAWINGS. WHERE NECESSARY, NEW WATER MAINS SHALL BE INSTALLED AT A GREATER DEPTH TO CLEAR OBSTACLES SHOWN ON THE DRAWINGS AT NO ADDITIONAL COST TO THE OWNER. MINIMUM CLEARANCES TO UTILITIES, AS SHOWN ON THE DRAWINGS SHALL BE MAINTAINED.
10. EXISTING WATER MAINS OR SERVICES SHALL NOT BE ABANDONED WITHOUT THE APPROVAL OF THE OWNER. WATER SERVICE SHALL NOT BE INTERRUPTED MORE THAN 4 HOURS WITHOUT PRIOR APPROVAL OF THE OWNER.
11. ANY HYDRANT WHICH IS NOT IN SERVICE SHALL BE COVERED WITH A SECURELY FASTENED AND APPROVED BAG.
12. VALVE BOXES ON MAINS TO BE ABANDONED SHALL BE REMOVED BY THE CONTRACTOR AND DELIVERED TO A LOCATION TO BE DETERMINED BY THE OWNER. SURFACE RESTORATION SHALL BE IN KIND UNLESS OTHERWISE NOTED.
13. THE LOCATION OF PIPES, CAPS, REDUCERS, BENDS, AND OTHER FITTINGS AT POINTS OF CONNECTIONS TO EXISTING MAINS IS APPROXIMATE. CONTRACTOR SHALL DIG A TEST PIT AT EACH LOCATION TO DETERMINE THE DIAMETER AND MATERIAL OF THE EXISTING PIPE AND THE LOCATION OF THE TIE-IN POINT.
14. ALL CATCH BASINS WITHIN PROJECT LIMITS SHALL BE PROTECTED AS SHOWN ON DETAIL SHEET.
15. ALL STREET EXCAVATIONS SHALL BE COMPLETELY CLOSED AT THE END OF EACH WORKING DAY BY BACKFILLING. COVERING WITH STEEL PLATES MAY BE ALLOWED IF APPROVED BY THE ENGINEER.
16. THE CONTRACTOR SHALL COMPLY WITH ALL REQUIREMENTS OF MASSACHUSETTS GENERAL LAW CHAPTER 82A, TRENCH EXCAVATION AND SAFETY REQUIREMENTS, TO PREVENT THE GENERAL PUBLIC FROM UNAUTHORIZED ACCESS TO UNATTENDED TRENCHES.
17. THE CONTRACTOR SHALL NOT OPEN OR CLOSE ANY VALVES WHICH HOLD WATER IN THE SYSTEM. THE OWNER WILL, ON 72 HOURS NOTICE FROM THE CONTRACTOR, OPEN AND/OR CLOSE ANY VALVES REQUIRED FOR DRAINING OR ADMITTING WATER TO THE VARIOUS SECTIONS OF THE WATER MAINS. THE CONTRACTOR IS RESPONSIBLE TO NOTIFY IN WRITING 48 HOURS IN ADVANCE, ANY OCCUPANT THAT WILL BE WITHOUT WATER DUE TO A SHUTDOWN.
18. SOME WATER SERVICE CONNECTIONS MAY NOT BE SHOWN ON THE DRAWINGS. THE OWNER WILL MARK THE LOCATION OF SUCH CONNECTIONS, PROVIDED THE CONTRACTOR GIVES THE OWNER AT LEAST 72 HOURS ADVANCE NOTICE.
19. ELEVATIONS REFERENCED ARE NORTH AMERICAN VERTICAL DATUM OF 1988 (NAVD88).
20. EXISTING UTILITY AND PROPERTY LINE INFORMATION, TOPOGRAPHIC INFORMATION, EDGE OF PAVEMENT, UTILITY POLE LOCATIONS, AND LOCATIONS OF EXISTING ABOVE GROUND STRUCTURES WERE TAKEN FROM PLANS PREPARED BY CONTROL POINT ASSOCIATES INC. AND DATED DECEMBER 26, 2019.
21. WHERE AN EXISTING UTILITY IS FOUND TO CONFLICT WITH THE PROPOSED WORK THE LOCATION, ELEVATION, AND SIZE OF THE UTILITY SHALL BE ACCURATELY DETERMINED WITH OUT DELAY BY THE CONTRACTOR AND THE INFORMATION FURNISHED TO THE ENGINEER FOR RESOLUTION OF THE CONFLICT.
22. CONTRACTOR SHALL MAKE ARRANGEMENTS FOR THE SUPPORT OF UTILITY POLES DURING UTILITY INSTALLATION AS NECESSARY WITH THE APPROPRIATE UTILITY AT THE CONTRACTORS EXPENSE.

Project:

TOWN OF BLACKSTONE, MASSACHUSETTS
DEPARTMENT OF PUBLIC WORKS

WATER TREATMENT PLANT

53 ELM STREET, BLACKSTONE, MASSACHUSETTS, 01504

Weston & Sampson

Weston & Sampson Engineers, Inc.
55 Walkers Brook Drive
Reading, MA, 01867
978.532.1900 800.SAMPSON
www.westonandsampson.com

Consultants:

Revisions:

No.	Date	Description

Seal:

COMMONWEALTH OF MASSACHUSETTS
JEFFREY W. McCLURE
CIVIL
No. 41938
REGISTERED PROFESSIONAL ENGINEER

COA:

"COPYRIGHT ©2021 BY WESTON & SAMPSON
THIS DRAWING HAS BEEN PREPARED FOR THE EXCLUSIVE USE OF THE CLIENT & PROJECT NAME LISTED ON THIS DRAWING ONLY.

REPRODUCTION, RELEASE OF UTILIZATION OF THE DRAWING CONTENT BY OTHER CLIENTS / FIRMS AND ON OTHER PROJECTS IS PROHIBITED BY LAW.

WESTON & SAMPSON RETAINS THE EXCLUSIVE USE OF THE INTELLECTUAL PROPERTY CONTAINED HEREIN.

Issued For:

BID DOCUMENTS

Scale:	AS NOTED
Date:	5/21/2021
Drawn By:	MEW
Reviewed By:	SHK
Approved By:	JWM
W&S Project No.:	2200740
W&S File No.:	-

Drawing Title:

ABBREVIATIONS, NOTES, AND LEGENDS

Sheet Number:

G000

COPYRIGHT 2019 WESTON & SAMPSON

\\ws03.local\WSE\Projects\MA\Blackstone MA\2200740 WTP Design\CAD\Blackstone - G1.dwg

Rev: 1 R. Date: 04/10/2019

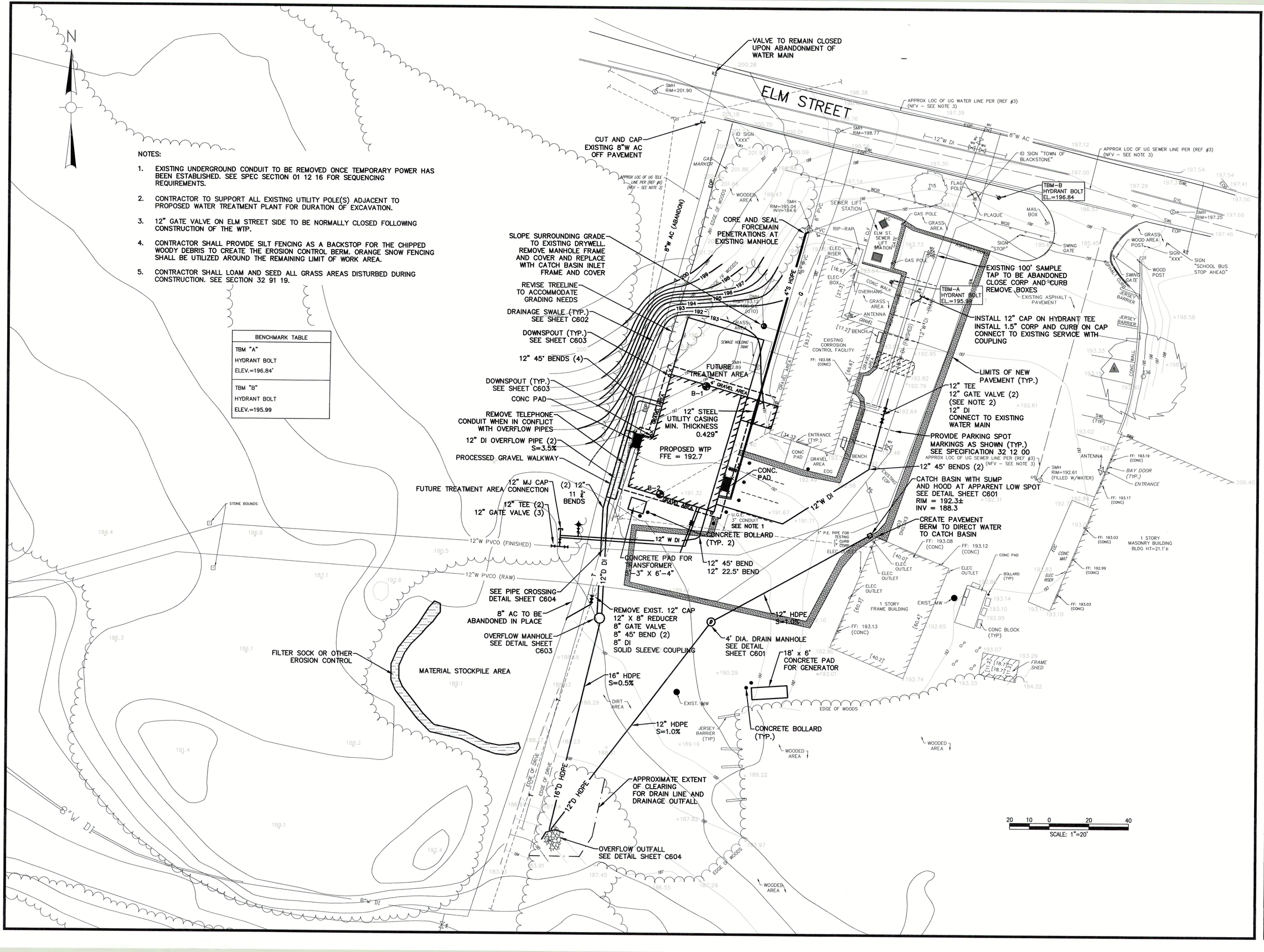

Project:

TOWN OF BLACKSTONE, MASSACHUSETTS
DEPARTMENT OF PUBLIC WORKS

WATER TREATMENT PLANT

53 ELM STREET, BLACKSTONE, MASSACHUSETTS, 01504

Weston & Sampson

Weston & Sampson Engineers, Inc.
55 Walkers Brook Drive
Reading, MA, 01867
978.532.1900 800.SAMPSON
www.westonandsampson.com

Consultants:

Revisions:

No.	Date	Description

Seal:

COMMONWEALTH OF MASSACHUSETTS — JEFFREY W. McCLURE — CIVIL — No. 49178 — REGISTERED PROFESSIONAL ENGINEER

COA:

"COPYRIGHT ©2021 BY WESTON & SAMPSON
THIS DRAWING HAS BEEN PREPARED FOR THE EXCLUSIVE USE OF THE CLIENT & PROJECT NAME LISTED ON THIS DRAWING ONLY.

REPRODUCTION, RELEASE OF UTILIZATION OF THE DRAWING CONTENT BY OTHER CLIENTS / FIRMS AND ON OTHER PROJECTS IS PROHIBITED BY LAW.

WESTON & SAMPSON RETAINS THE EXCLUSIVE USE OF THE INTELLECTUAL PROPERTY CONTAINED HEREIN.

Issued For:

BID DOCUMENTS

Scale:	AS NOTED
Date:	5/21/2021
Drawn By:	MEW
Reviewed By:	SHK
Approved By:	JWM
W&S Project No.:	2200740
W&S File No.:	-

Drawing Title:

SITE PLAN

Sheet Number:

C201

COPYRIGHT 2019 WESTON & SAMPSON

N

ABANDON EXISTING AC WATER MAIN

8"W AC (ABANDON)

2" HDPE TO SEWER MH

4" HDPE TO SEWER MH

8" PVC

4"S HDPE

ELM ST. SEWER LIFT STATION

EL.=196.84

EXISTING 100' SAMPLE TAP TO BE ABANDONED CLOSE CORP AND CURB REMOVE BOXES

TBM-A
HYDRANT BOLT
EL.=195.99

INSTALL 12" CAP ON HYDRANT TEE
INSTALL 1.5" CORP AND CURB ON CAP
CONNECT TO EXISTING SERVICE WITH COUPLING

12"W DI (FINISHED)

12"W DI (RAW)

EXISTING CORROSION CONTROL FACILITY

DEMOLISH EXISTING OUT OF SERVICE SEWER HOLDING TANK AS NEEDED TO ACCOMMODATE INSTALLATION OF 4" AND 2" SEWER LINES

12" 45° BENDS (4)

FUTURE TREATMENT AREA

192.7

12" STEEL UTILITY CASING MIN. THICKNESS 0.429"

PROVIDE PARKING SPOT MARKINGS AS SHOWN SEE SPECIFICATION 32 12 00

REMOVE TELEPHONE CONDUIT WHEN IN CONFLICT WITH OVERFLOW PIPES

EOP

12" DI OVERFLOW PIPE (2) S=3.5%

PROPOSED WTP FFE = 192.7

2" HDPE

REMOVE EXISTING BEND
12" GATE VALVE (2)
12" TEE
12" DI
CONNECT TO EXISTING WATER MAIN

PROCESSED GRAVEL WALKWAY

SLUDGE LINE TRUCK CONNECTION
(2) 4" GATE VALVE
4" HDPE
SEE DETAIL SHEET C602

12" 45° BENDS (2)

12" 45° VERTICAL BENDS (2)

12" X 6" ANCHOR TEE
6" GATE VALVE
6" DI HYDRANT

12" MJ CAP
FUTURE TREATMENT AREA CONNECTION

12" TEE (2)
12" GATE VALVE (3)
12"DI TO PVCO RESTRAINED SOLID SLEEVE

(2) 12" 11 1/4° BENDS

SEE NOTE 2

2" HDPE (FROM SUMP)

12"W DI

CONCRETE PAD FOR TRANSFORMER 5'-3" X 6'-4"

2" CORP
2" PE
2" CURB

12" 45° BEND
12" 22.5° BEND

12"W PVCO (FINISHED)

12" W DI

1" PE

12"W PVCO (RAW)

12" DI

SEE PIPE CROSSING DETAIL SHEET C603

8" AC TO BE ABANDONED IN PLACE

REMOVE EXIST. 12" CAP
12" X 8" REDUCER
8" GATE VALVE
8" 45° BEND (2)
8" DI
SOLID SLEEVE COUPLING

8"W (AC)

NOTES:

1. EXISTING UNDERGROUND CONDUIT TO BE REMOVED ONCE TEMPORARY POWER HAS BEEN ESTABLISHED. SEE SPEC SECTION 01 12 16 FOR SEQUENCING REQUIREMENTS.
2. CONTRACTOR TO SUPPORT ALL EXISTING UTILITY POLE(S) ADJACENT TO PROPOSED WATER TREATMENT PLANT FOR DURATION OF EXCAVATION.

10 5 0 10 20
SCALE: 1"=10'

Project:

TOWN OF BLACKSTONE, MASSACHUSETTS
DEPARTMENT OF PUBLIC WORKS

WATER TREATMENT PLANT

53 ELM STREET, BLACKSTONE, MASSACHUSETTS, 01504

Weston & Sampson

Weston & Sampson Engineers, Inc.
55 Walkers Brook Drive
Reading, MA, 01867
978.532.1900 800.SAMPSON
www.westonandsampson.com

Consultants:

Revisions:

No.	Date	Description

Seal:

COMMONWEALTH OF MASSACHUSETTS
JEFFREY W. McCLAINE
CIVIL
REGISTERED PROFESSIONAL ENGINEER

COA:

"COPYRIGHT ©2021 BY WESTON & SAMPSON
THIS DRAWING HAS BEEN PREPARED FOR THE EXCLUSIVE USE OF THE CLIENT & PROJECT NAME LISTED ON THIS DRAWING ONLY.

REPRODUCTION, RELEASE OF UTILIZATION OF THE DRAWING CONTENT BY OTHER CLIENTS / FIRMS AND ON OTHER PROJECTS IS PROHIBITED BY LAW.

WESTON & SAMPSON RETAINS THE EXCLUSIVE USE OF THE INTELLECTUAL PROPERTY CONTAINED HEREIN.

Issued For:

BID DOCUMENTS

Scale:	AS NOTED
Date:	5/21/2021
Drawn By:	MEW
Reviewed By:	SHK
Approved By:	JWM
W&S Project No.:	2200740
W&S File No.:	-

Drawing Title:

SITE PLAN - PIPING

Sheet Number:

C202

Rev. 1.6 Date: 04/10/2019

COPYRIGHT 2019 WESTON & SAMPSON

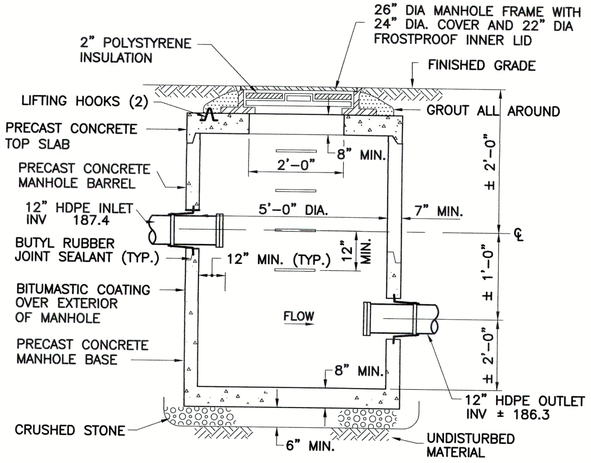

TYPICAL DRAIN MANHOLE
N.T.S.

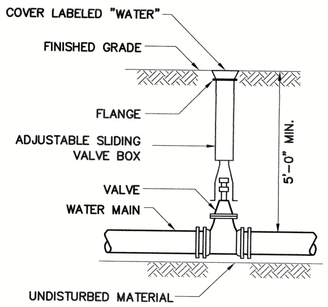

VALVE AND BOX DETAIL
N.T.S.

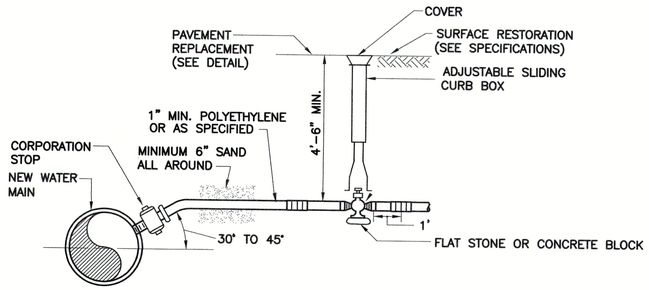

NOTE: PROVIDE SADDLE FOR AC AND PVCO MAINS AND ALL 2" OR LARGER STOPS

WATER SERVICE DETAIL
N.T.S.

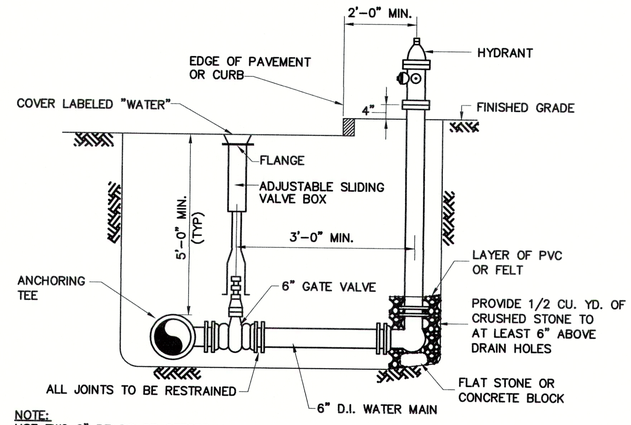

NOTE:
USE TWO 6" BENDS OR OFFSET ON LATERAL TO ACHIEVE REQUIRED HYDRANT ELEVATION IF NECESSARY

HYDRANT AND VALVE DETAIL
N.T.S.

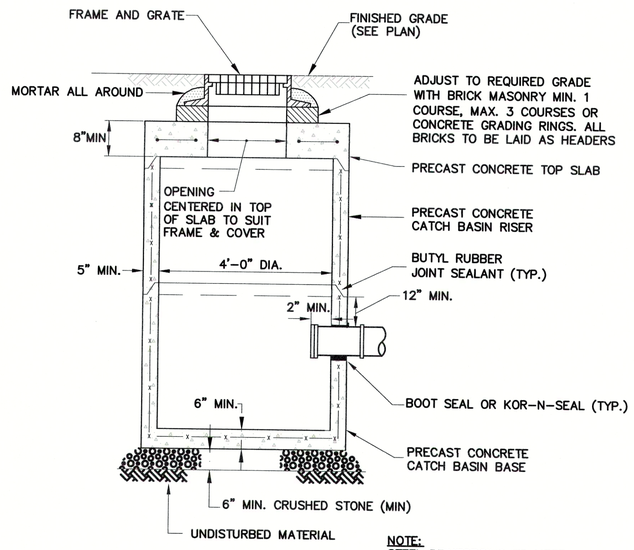

NOTE:
STEEL REINFORCING TO MEET OR EXCEED H20 LOADING

PRECAST CATCH BASIN DETAIL
N.T.S.

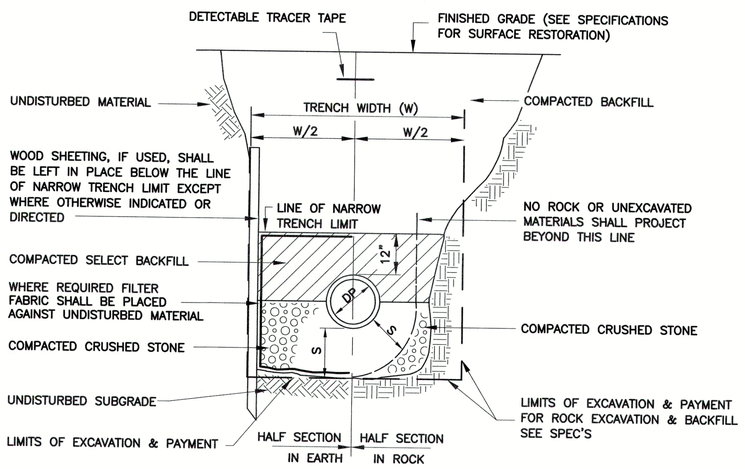

NOTE:
FOR W, DP, & S, SEE TABLE A

TRENCH DETAIL (SEWER, FORCE MAIN, STORM DRAIN, OVERFLOW PIPE)
N.T.S.

DEPTH TO INVERT	DIAMETER OF PIPE (DP)	MAXIMUM TRENCH WIDTH BELOW LINE OF NARROW TRENCH LIMIT (SHEETED OR UNSHEETED) (W)	MINIMUM CLEARANCE (S)
0–12'	UP TO 18"	5'	6"

TABLE A

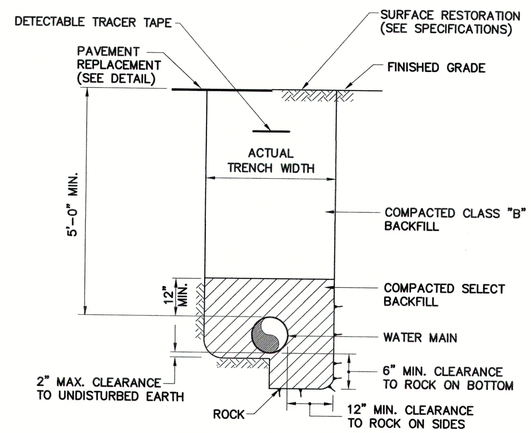

WATER MAIN TRENCH DETAIL
N.T.S.

TABLE 1
REQUIRED LENGTH OF RESTRAINED JOINTS FROM FITTINGS (FEET)

PIPE SIZE	90° BEND	45° BEND OR WYE BRANCH	22 1/2° BEND	11 1/4° BEND	PLUG, CAP OR IN-LINE VALVE	TEE (BRANCH)
6"	25 (30.5)	10.5 (12.5)	5 (6)	2.5 (3)	43 (64)	34 (51)
8"	33 (40)	13.5 (16.5)	6.5 (8)	3 (4)	55 (82)	47 (70)
10"	40 (48.5)	16.5 (20)	8 (9.5)	4 (5)	67 (100)	58 (87)
12"	47 (56.5)	19.5 (23.5)	9.5 (11.5)	4.5 (5.5)	79 (118)	70 (105)
16"	59.5 (72)	24.5 (30)	12 (14.5)	6 (7)	101 (152)	92 (139)
20"	72 (86.5)	30 (36)	14.5 (17)	7 (8.5)	123 (184)	114 (171)
24"	84 (100)	35 (41)	16.5 (20)	8 (10)	144 (216)	134 (202)
30"	100 (120)	41 (50)	20 (24)	10 (12)	174 (261)	165 (247)

NOTES:
1. RESTRAINED LENGTHS LISTED IN PARENTHESES ARE FOR PIPE WRAPPED IN POLYETHYLENE. THE OTHER ASSOCIATED LENGTHS ARE FOR PLAIN UNWRAPPED DUCTILE IRON PIPE.
2. THE CONTRACTOR SHALL USE THIS TABLE IN CONJUNCTION WITH THE APPROPRIATE PIPE SPECIFICATION SECTION.

Project:
TOWN OF BLACKSTONE, MASSACHUSETTS
DEPARTMENT OF PUBLIC WORKS
WATER TREATMENT PLANT
53 ELM STREET, BLACKSTONE, MASSACHUSETTS, 01504

Weston & Sampson
Weston & Sampson Engineers, Inc.
55 Walkers Brook Drive, Suite 100
Reading, MA 01867
978.532.1900 800.SAMPSON
www.westonandsampson.com

Consultants:

Revisions:

No.	Date	Description

Seal:
COMMONWEALTH OF MASSACHUSETTS
JEFFREY W. McCLURE
CIVIL
No. 41981
REGISTERED PROFESSIONAL ENGINEER

COA:
"COPYRIGHT ©2021 BY WESTON & SAMPSON
THIS DRAWING HAS BEEN PREPARED FOR THE EXCLUSIVE USE OF THE CLIENT & PROJECT NAME LISTED ON THIS DRAWING ONLY.
REPRODUCTION, RELEASE OF UTILIZATION OF THE DRAWING CONTENT BY OTHER CLIENTS / FIRMS AND ON OTHER PROJECTS IS PROHIBITED BY LAW.
WESTON & SAMPSON RETAINS THE EXCLUSIVE USE OF THE INTELLECTUAL PROPERTY CONTAINED HEREIN.

Issued For:
BID DOCUMENTS

Scale:	AS NOTED
Date:	5/21/2021
Drawn By:	MEW
Reviewed By:	SHK
Approved By:	JWM
W&S Project No.:	2200740
W&S File No.:	-

Drawing Title:
WATER AND SEWER DETAILS

Sheet Number:
C601

Rev: 1.6 Date: 04/10/2019

COPYRIGHT 2019 WESTON & SAMPSON

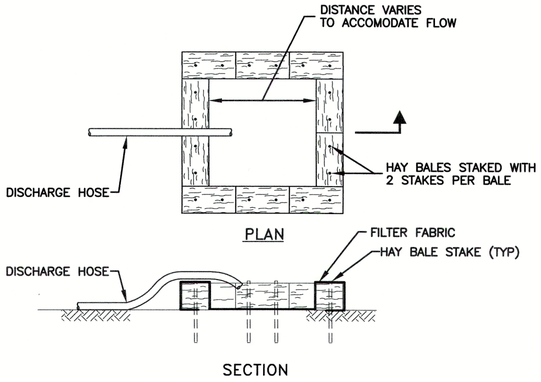

TEMPORARY DEWATERING DISCHARGE DISPOSAL DETAIL
N.T.S.

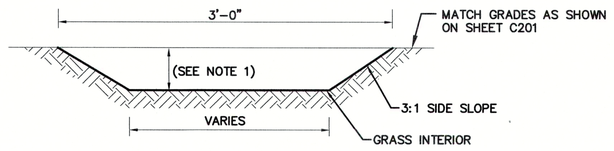

TYPICAL DRAIN SWALE DETAIL
N.T.S.

NOTE:

1. SWALE WILL BE UNIFORMLY SLOPED TO MATCH BEGINNING AND ENDING BOTTOM ELEVATIONS AS SHOWN ON SHEET C201.

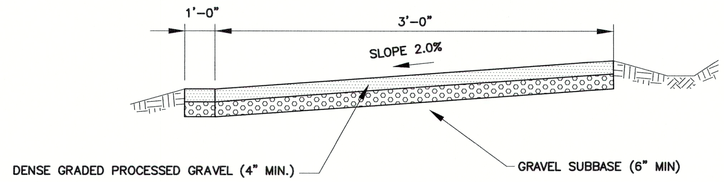

NOTES:

1. SLOPE WALKWAY AWAY FROM WTP.

PROCESSED GRAVEL WALKWAY DETAIL
N.T.S.

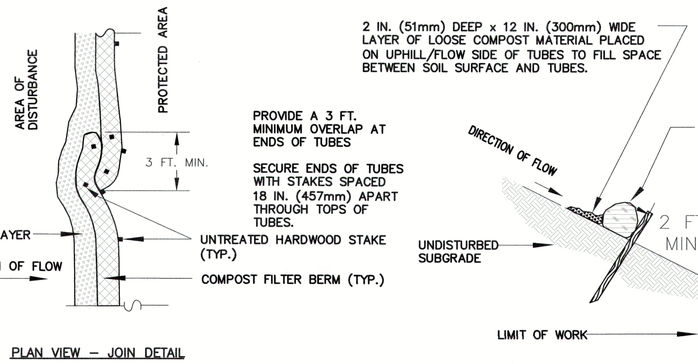

PLAN VIEW – JOIN DETAIL

SINGLE COMPOST FILTER BERM DETAIL
N.T.S

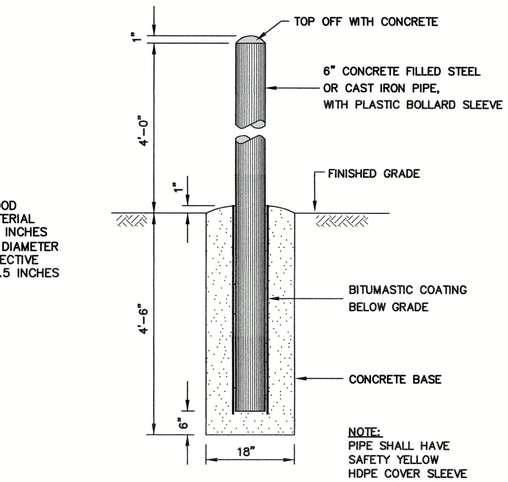

BOLLARD DETAIL
N.T.S.

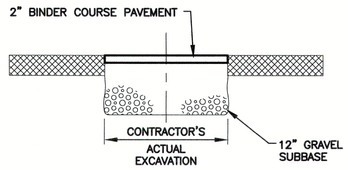

TYPE 1: TEMPORARY TRENCH WIDTH PAVEMENT
FULL SECTION

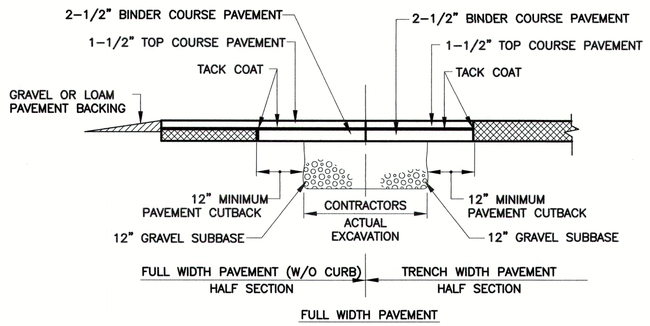

PAVEMENT REPLACEMENT DETAILS
N.T.S.

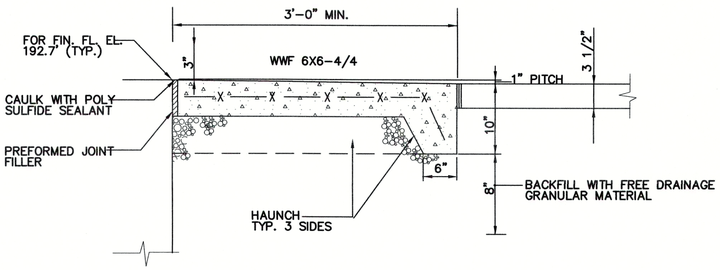

TYPICAL CONCRETE ENTRANCE PAD
N.T.S.

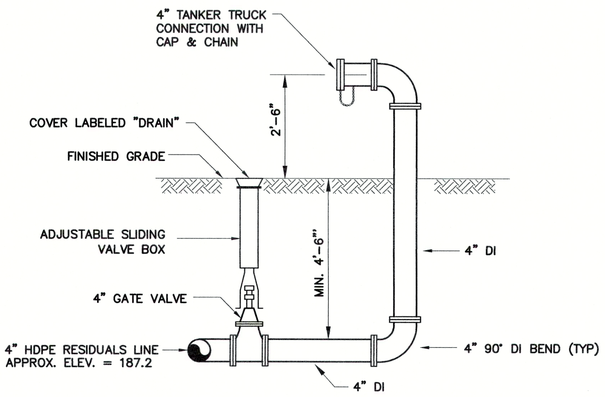

SLUDGE LINE TRUCK CONNECTION DETAIL
N.T.S.

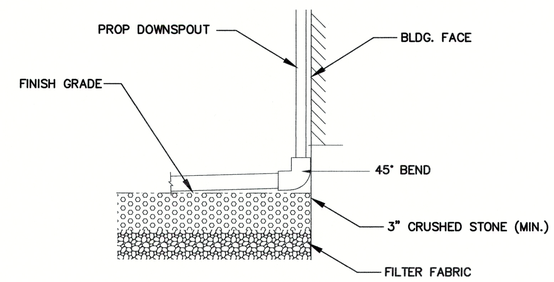

GUTTER DOWNSPOUT CONNECTION DETAIL
N.T.S.

Project:

TOWN OF BLACKSTONE,
MASSACHUSETTS
DEPARTMENT OF PUBLIC
WORKS

WATER TREATMENT PLANT

53 ELM STREET, BLACKSTONE,
MASSACHUSETTS, 01504

Weston & Sampson

Weston & Sampson Engineers, Inc.
55 Walkers Brook Drive, Suite 100
Reading, MA 01867
978.532.1900 800.SAMPSON
www.westonandsampson.com

Consultants:

Revisions:

No.	Date	Description

Seal:

JEFFREY W. McCLURE CIVIL No. 41648 REGISTERED PROFESSIONAL ENGINEER
COMMONWEALTH OF MASSACHUSETTS

COA:

"COPYRIGHT ©2021 BY WESTON & SAMPSON
THIS DRAWING HAS BEEN PREPARED FOR THE EXCLUSIVE USE OF THE CLIENT & PROJECT NAME LISTED ON THIS DRAWING ONLY.

REPRODUCTION, RELEASE OF UTILIZATION OF THE DRAWING CONTENT BY OTHER CLIENTS / FIRMS AND ON OTHER PROJECTS IS PROHIBITED BY LAW.

WESTON & SAMPSON RETAINS THE EXCLUSIVE USE OF THE INTELLECTIAL PROPERTY CONTAINED HEREIN.

Issued For:

BID DOCUMENTS

Scale:	AS NOTED
Date:	5/21/2021
Drawn By:	MEW
Reviewed By:	SHK
Approved By:	JWM
W&S Project No.:	2200740
W&S File No.:	-

Drawing Title:

SITE DETAILS

Sheet Number:

C602

COPYRIGHT 2019 WESTON & SAMPSON

Rev: 1.6 Date: 04/10/2019
\\ent33.local\WSProjects\MA\Blackstone MA\2200740 WTP Design\CAD\Sht Details.dwg

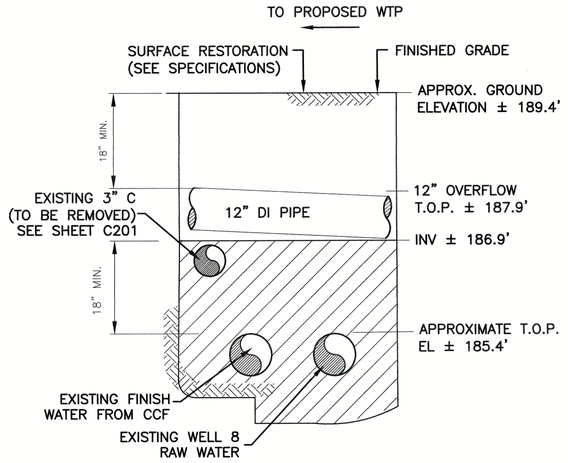

OVERFLOW WATER MAIN CROSSING DETAIL

N.T.S.

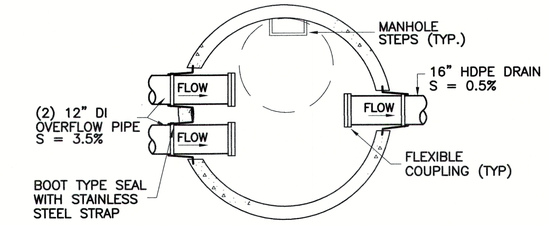

PLAN

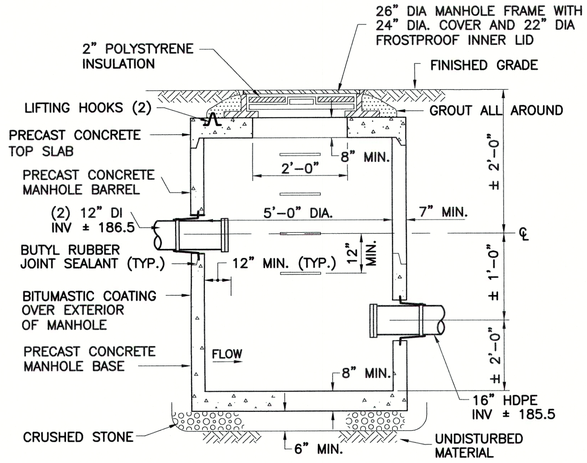

BASIN OVERFLOW MANHOLE DETAIL

N.T.S.

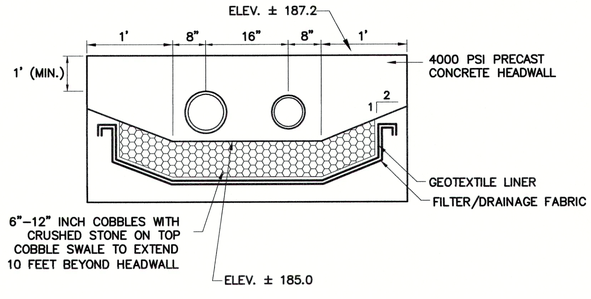

NOTES:

1. PROVIDE SCREENING AT END OF PIPE TO PREVENT ANIMALS AND INSECTS FROM ENTERING.

OVERFLOW OUTFALL

N.T.S.

Project:

TOWN OF BLACKSTONE, MASSACHUSETTS
DEPARTMENT OF PUBLIC WORKS

WATER TREATMENT PLANT

53 ELM STREET, BLACKSTONE, MASSACHUSETTS, 01504

Weston & Sampson

Weston & Sampson Engineers, Inc.
55 Walkers Brook Drive, Suite 100
Reading, MA 01867
978.532.1900 800.SAMPSON
www.westonandsampson.com

Consultants:

Revisions:

No.	Date	Description

Seal:

COMMONWEALTH OF MASSACHUSETTS — JEFFREY W. McCLURE — CIVIL — No. 41838 — REGISTERED PROFESSIONAL ENGINEER

COA:

"COPYRIGHT ©2021 BY WESTON & SAMPSON. THIS DRAWING HAS BEEN PREPARED FOR THE EXCLUSIVE USE OF THE CLIENT & PROJECT NAME LISTED ON THIS DRAWING ONLY.

REPRODUCTION, RELEASE OF UTILIZATION OF THE DRAWING CONTENT BY OTHER CLIENTS / FIRMS AND ON OTHER PROJECTS IS PROHIBITED BY LAW.

WESTON & SAMPSON RETAINS THE EXCLUSIVE USE OF THE INTELLECTUAL PROPERTY CONTAINED HEREIN.

Issued For:

BID DOCUMENTS

Scale:	AS NOTED
Date:	5/21/2021
Drawn By:	MEW
Reviewed By:	SHK
Approved By:	JWM
W&S Project No.:	2200740
W&S File No.:	-

Drawing Title:

OVERFLOW PIPING DETAILS

Sheet Number:

C603

Rev. 1.5 Date: 04/10/2019

COPYRIGHT 2019 WESTON & SAMPSON

\\wes01.local\WSEProjects\MA\Blackstone MA\2200740.WTP Design\CAD\Site Civil\c603.dwg

DEFERRED SUBMITTALS - IBC 107.3.4.1

SPECIFICATION NUMBER

DIVISION 5
05 50 00 – METAL FABRICATIONS
- STAIRS
- BOLLARDS

DIVISION 13
13 42 00 – PRE-ENGINEERED METAL BUILDING

CODE PLAN LEGEND

EXIT CAPACITY

###
###

ACTUAL EGRESS OF DOOR OR STAIR
MAXIMUM ALLOWABLE EGRESS CAPACITY OF DOOR OR STAIR

ROOM NAME

101

ROOM NUMBER

150
50SF/P | 3P

MAXIMUM NUMBER OF ALLOWABLE OCCUPANTS
AREA IN NET SQUARE FEET (GROSS SQUARE FEET)
OCCUPANCY LOAD FACTOR

115'

PATH OF MAXIMUM TRAVEL DISTANCE TO EXIT

15

DIRECTION OF TRAVEL TO EXIT

FIRE EXTINGUISHER'S:

FE = FIRE EXTINGUISHER, BRACKET MOUNTED

FEC = FIRE EXTINGUISHER, CABINET MOUNTED (SEMI-RECESSED)

SEPARATIONS ARE DESIGNATED AS FOLLOWS:

2 HOUR FIRE-RESISTANCE RATED FIRE BARRIER

1 HOUR FIRE-RESISTANCE RATED FIRE BARRIER

SMOKE RESISTANT SEPARATION

INTERNATIONAL ENERGY CONSERVATION CODE 2018 (IECC) - ZONE 5

ENERGY CODE: WALL TYPE VALUES

TABLE C402.1.4 - IECC 2018

INSULATED METAL WALL PANEL ON GIRTS

MATERIAL	DEPTH	R-VALUE
INSULATED METAL WALL PANEL	4.00"	26.00
TOTAL R-VALUE PROVIDED		26.00
COMPUTED U-VALUE: 1/R-VALUE = 1/26.00 = 0.038		
REQUIRED U-VALUE = 0.052 FOR A METAL BUILDING WALL		
EQUIVALENT COMPUTED R-VALUE		17.2

ENERGY CODE: ROOF TYPE VALUES

TABLE C402.1.4 - IECC 2018

STANDING SEAM METAL ROOF W/ THERMAL BLOCKS & LINER SYSTEM

MATERIAL	DEPTH	R-VALUE
STANDING SEAM METAL ROOF PANEL	N / A	0.00
THERMAL BLOCKS (UPPER INSULATION LAYER)	4"	13
BATT INSULATION (STRUCTURE LAYER)	8"	25
FABRIC LINER SYSTEM	0"	0.00
TOTAL R-VALUE		R-38
COMPUTED U-VALUE: 1/R-VALUE = 1/38 = 0.0263		
REQUIRED U-VALUE = 0.035 FOR A METAL BUILDING		

ENERGY CODE: FENESTRATION VALUES

TABLE C402.4 - IECC 2018

BUILDING ENVELOPE FENESTRATIONS - U-FACTORS

MATERIAL	SPECIFIED U-VALUE	MAX ALLOWED U-VALUE
FIXED FENESTRATION	0.27 SUMMER / 0.30 WINTER	0.38
OPERABLE FENESTRATION	0.27 SUMMER / 0.30 WINTER	0.45
ENTRANCE DOORS (PERSONNEL)	0.33	0.77

BUILDING CODE ANALYSIS
Project Description:

The proposed building is a +/- 2,753 Gross SF water treatment plant to be located on Elm Street behind the existing administration, chemical facility. The new facility will house filter tanks, pumps, process piping and other equipment to remove manganese and iron from the raw water and to upgrade the treatment capacity from the two wells. The plant is intended to operate automatically, without full-time manned oversight, and will be intermittently staffed by water department personnel for testing of the water and general maintenance of the facility.

APPLICABLE CODES AND STANDARDS:

- MASSACHUSETTS STATE BUILDING CODE & APPROPRIATE AMENDMENTS:
  - 780 CMR NINTH EDITION
  - IBC 2015
- 2015 INTERNATIONAL MECHANICAL CODE (IMC)
- 248 CMR 10.00 UNIFORM STATE PLUMBING CODE (USPC)
- 2020 NATIONAL ELECTRICAL CODE
- 2018 INTERNATIONAL ENERGY CONSERVATION CODE (IECC)
  - 2017 STRETCH ENERGY CODE PROVISIONS ARE NOT APPLICABLE TO COMMERCIAL BUILDINGS LESS THAN 100,000 SF)
- 2019 MASSACHUSETTS COMPREHENSIVE FIRE CODE
  - 527 CMR, BOARD OF FIRE PREVENTION REGULATIONS
  - NFPA 1 FIRE CODE, 2015 EDITION
- 271 CMR: BOARD OF EXAMINERS OF SHEET METAL WORKERS
- 521 CMR ARCHITECTURAL ACCESS BOARD REGULATIONS

BUILDING CODE ANALYSIS:

CHAPTER 3 - USE AND OCCUPANCY CLASSIFICATION

306.3 FACTORY INDUSTRIAL GROUP F, F-2 (LOW-HAZARD)

- FACTORY INDUSTRIAL USES THAT INVOLVE THE FABRICATION OR MANUFACTURING OF NON-COMBUSTIBLE MATERIALS WHICH DURING FINISHING, PACKING OR PROCESSING DO NOT INVOLVE A SIGNIFICANT FIRE HAZARD, SHALL BE CLASSIFIED AS F-2 OCCUPANCIES.

CHAPTER 5- GENERAL BUILDING HEIGHTS AND AREAS

(TABLE. 504.3) ALLOWABLE BUILDING HEIGHT
TYPE VB CONSTRUCTION
"F" / NS
ALLOWABLE HEIGHT: **40'-0"**
PROPOSED HEIGHT (COMPLIANT): **32'-10"**

(TABLE 504.4) ALLOWABLE NUMBER OF STORIES
"F-2" OCCUPANCY
ALLOWABLE STORIES: **2 STORIES**
PROPOSED STORIES (COMPLIANT): **1 STORY**

(TABLE 506.2) ALLOWABLE AREA FACTOR
"F-2" OCCUPANCY / NON-SPRINKLERED **13,000 SF**
(TYPE VB CONSTRUCTION)
PROPOSED AREA FOR TOTAL BUILDING (COMPLIANT): **2,000 SF**

CHAPTER 6 - TYPES OF CONSTRUCTION

(TABLE 601) FIRE-RESISTANCE RATING REQUIREMENTS FOR BUILDING ELEMENTS

CONSTRUCTION TYPE VB - BUILDING ELEMENTS

STRUCTURAL FRAME (INC. COLUMNS, GIRDERS AND TRUSSES):	0 HRS
BEARING WALLS - EXTERIOR:	0 HRS
BEARING WALLS - INTERIOR:	0 HRS
NON BEARING WALLS AND PARTITIONS - EXTERIOR:	0 HRS
NON BEARING WALLS AND PARTITIONS - INTERIOR:	0 HRS
FLOOR CONSTRUCTION:	0 HRS
ROOF CONSTRUCTION:	0 HRS

(TABLE 602) FIRE RESISTANCE RATING REQUIREMENTS FOR EXTERIOR WALLS BASED ON FIRE SEPARATION DISTANCE, (F-2 OCCUPANCY, TYPE VB CONSTRUCTION)

X< 5 FEET =	1 HOUR
5 FEET ≤ X < 10 FEET =	1 HOUR
10 FEET ≤ X < 30 FEET =	0 HOUR
X ≥ 30 FEET =	0 HOURS

NO ADJACENT BUILDINGS OR STRUCTURES ARE WITHIN 30 FEET OF THE PROPOSED FACILITY.

CONSTRUCTION TYPE VB / F-2 OCCUPANCY
FIRE SEPARATION DISTANCE = CLOSET BUILDING IS > 30' AWAY THEREFORE RATING REQUIREMENTS ARE 0 HRS FOR EXTERIOR WALL ASSEMBLIES.

CHAPTER 9 - FIRE PROTECTION SYSTEMS

THERE ARE NO ADDITIONAL REQUIREMENTS FOR A GROUP F-2 FACTORY CLASSIFICATION.

CHAPTER 10 - MEANS OF EGRESS

(TABLE 1004.1.2) MAXIMUM FLOOR AREA ALLOWANCE PER OCCUPANT

INDUSTRIAL AREA = 100 GSF / OCC

(SECT. 1004) OCCUPANT LOAD

F-2, INDUSTRIAL AREA : 2,000 SF (÷ 100 SF/OCC) = 20 OCCUPANTS

(SECT. 1005) MEANS OF EGRESS SIZING

DOORWAY WIDTH REQUIRED MIN. 20 OCC @ 0.2 IN. PER OCC = 4 IN
DOORWAY WIDTH PROVIDED 36" (x 1 DOORS) = 32 IN CLEAR

(TABLE 1006.2.1) SPACES WITH ONE EXIT OR EXIT ACCESS DOORWAY
F OCCUPANCY MAXIMUM OCCUPANCY = 49
MAXIMUM PROVIDED = 23

(SECT. 1017) EXIT ACCESS TRAVEL DISTANCE
EXITS SHALL BE SO LOCATED ON EACH STORY THAT THE MAXIMUM LENGTH OF EXIT ACCESS TRAVEL, MEASURED FROM THE MOST REMOTE POINT WITHIN A STORY ALONG THE NATURAL AND UNOBSTRUCTED PATH OF EGRESS TRAVEL TO THE EXTERIOR EXIT DOOR AT THE LEVEL OF EXIT DISCHARGE SHALL NOT EXCEED THE DISTANCE GIVEN IN TABLE 1017.2:

(TABLE 1017.2) EXIT ACCESS TRAVEL DISTANCE (WITHOUT SPRINKLER SYSTEM)

USE GROUP F-2 ALLOWABLE (MOST RESTRICTIVE): = 300 FT MAX
MAXIMUM PROVIDED: = 96 FT

CHAPTER 13 - ENERGY EFFICIENCY

THE BUILDING WILL COMPLY WITH CHAPTER 13 WHICH REFERENCES THE 2018 IECC. SEE TO THE LEFT FOR ADDITIONAL INFORMATION REGARDING R AND U-VALUES OF THE VARIOUS BUILDING COMPONENTS.

ACCESSIBILITY

THE FILTER BUILDING IS AN EMPLOYEE ONLY BUILDING THAT IS UNSUPERVISED MOST OF THE TIME. THE BUILDING WILL NOT BE ACCESSIBLE.

OTHER:

- THE BUILDING IS TO NOT BE SPRINKLERED AS IT IS UNDER THE THRESHOLD OF TABLE 506.2 LIMITATIONS AND ALSO THE 7,500 GSF LIMIT ALLOWED BY MGL C. 148, s 26G.

- CONFIRM FINAL ADDRESS / NUMBERING WITH FIRE DEPARTMENT.

ADDRESS IDENTIFICATION SIGNAGE: IFC 505.1

53

APPLICABILITY:

- VERIFY SPECIFIC REQUIREMENTS WITH LOCAL FIRE CODE OFFICIAL
- CHARACTER HEIGHT - 4" MINIMUM W/ 1/2" STROKE MINIMUM
- COLOR - EASILY IDENTIFIABLE COLOR, CONTRASTING WITH BACKGROUND

2 EXTERIOR SIGNAGE - ADDRESS
1 1/2" = 1'-0"

1 CODE BASIN LEVEL FLOOR PLAN
1/8" = 1'-0" 1/ A201

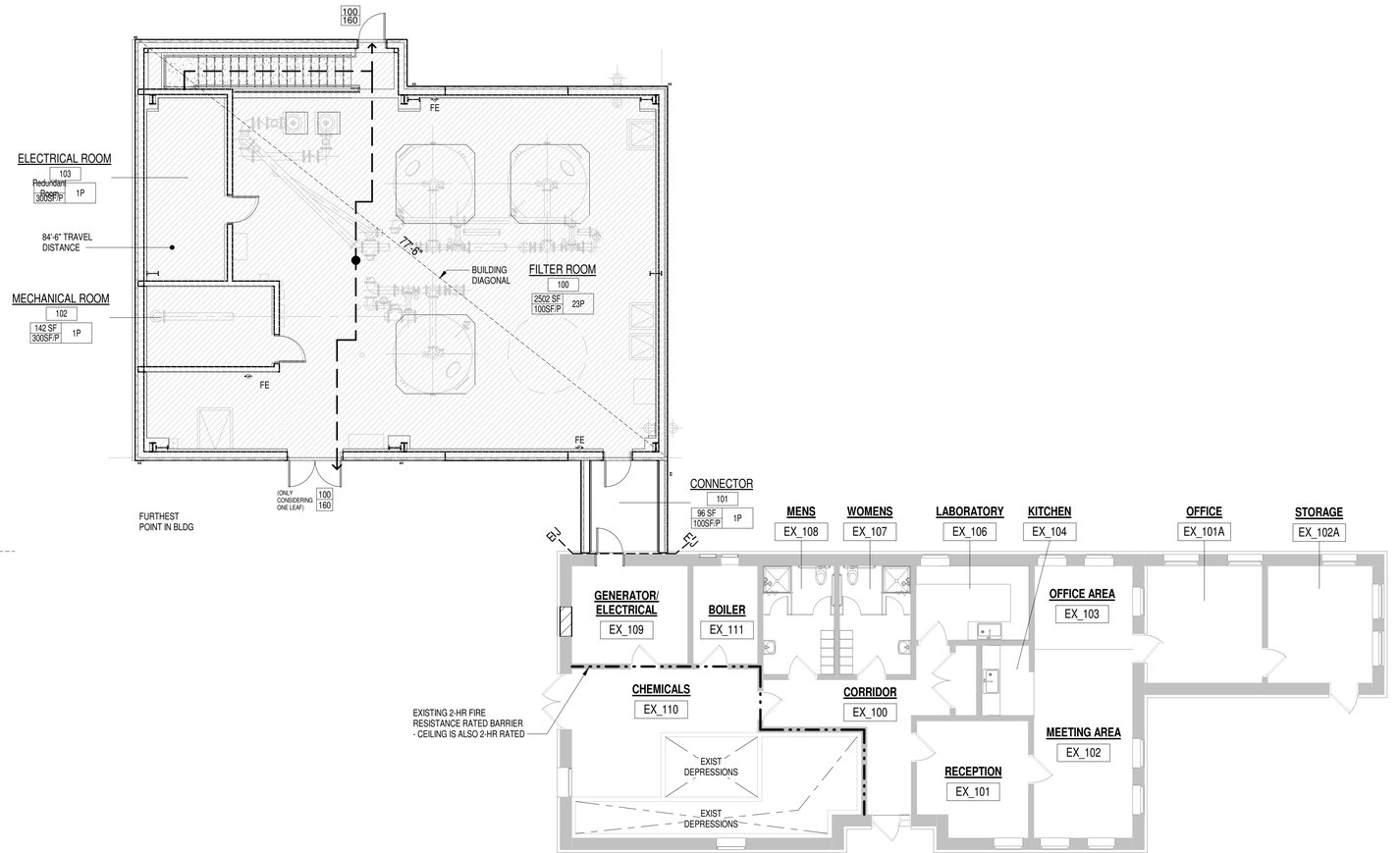

4 CODE FLOOR PLAN
1/8" = 1'-0" 1/ A201

Project:
TOWN OF BLACKSTONE, MASSACHUSETTS
DEPARTMENT OF PUBLIC WORKS
WATER TREATMENT PLANT
53 ELM STREET, BLACKSTONE, MASSACHUSETTS, 01504

Weston & Sampson
Weston & Sampson Engineers, Inc.
55 Walkers Brook Drive, Suite 100
Reading, MA 01867
978.532.1900 800.SAMPSON
www.westonandsampson.com

Consultants:

Revisions:

No.	Date	Description

COA:
"COPYRIGHT ©2021 BY WESTON & SAMPSON
THIS DRAWING HAS BEEN PREPARED FOR THE EXCLUSIVE USE OF THE CLIENT & PROJECT NAME LISTED ON THIS DRAWING ONLY.
REPRODUCTION, RELEASE OF UTILIZATION OF THE DRAWING CONTENT BY OTHER CLIENTS / FIRMS AND ON OTHER PROJECTS IS PROHIBITED BY LAW.
WESTON & SAMPSON RETAINS THE EXCLUSIVE USE OF THE INTELLECTUAL PROPERTY CONTAINED HEREIN.

Seal:

REGISTERED ARCHITECT
DANIEL G. TENNEY III
No. 6688
CAMBRIDGE
MA
COMMONWEALTH OF MASSACHUSETTS

Issued For:

BID DOCUMENTS

Scale: As indicated

Key Plan:

NORTH

Date:	MAY 21, 2021
Drawn By:	MMF
Reviewed By:	BPM
Approved By:	JRC
W&S Project No.:	2200740
W&S File No.:	246 - 101

Drawing Title:

CODE SUMMARY

Sheet Number:

G101

COPYRIGHT © 2021 WESTON & SAMPSON, INC.

6/1/2021 11:23:45 PM C:\Users\mcusker\OneDrive - WESTON & SAMPSON ENGINEERS, Inc\Documents\2200740_BlackstoneWTPDesign_Architecture_2020_mcuskerb.rvt

EXISTING ROOM FINISH SCHEDULE

#	ROOM NAME	FLOOR MAT	FLOOR FINISH	FLOOR BASE	WALLS MAT	WALLS FINISH	REMARKS
EX_100	CORRIDOR	← EXIST TO REMAIN →					
EX_101	RECEPTION	← EXIST TO REMAIN →					
EX_101A	OFFICE	← EXIST TO REMAIN →					
EX_102	MEETING AREA	EXIST CONC	EXIST VCT	EXIST RUBBER BASE	EXIST CMU / EXIST GYP BD	-	PROVIDE 2x2 ACT TILES AS INDICATED ON PLANS
EX_102A	STORAGE	← EXIST TO REMAIN →					
EX_103	OFFICE AREA	← EXIST TO REMAIN →					
EX_104	KITCHEN	← EXIST TO REMAIN →					
EX_106	LABORATORY	EXIST CONC	EXIST QUARRY TILE	EXIST QUARRY TILE	EXIST CMU / EXIST GYP BD	PNT / PNT	
EX_107	WOMENS	← EXIST TO REMAIN →					
EX_108	MENS	← EXIST TO REMAIN →					
EX_109	GENERATOR/ ELECTRICAL	← EXIST TO REMAIN →					
EX_110	CHEMICALS	← EXIST TO REMAIN →					
EX_111	BOILER	← EXIST TO REMAIN →					

DOOR SCHEDULE - EXIST BLDG

DOOR #	DOOR WIDTH	DOOR HEIGHT	DOOR TYPE	DOOR MATERIAL	FRAMES TYPE	FRAMES MATERIAL	HDWR SET	REMARKS
EX_108	3' - 0"	7' - 0"	EXIST WD-1	WD	EXIST HMF-2	HM	07	
EX_107	3' - 0"	7' - 0"	EXIST WD-1	WD	EXIST HMF-2	HM	07	
EX_110A	6' - 0"	7' - 0"	EXIST HM-1	HM	EXIST HMF-2	HM	08	PAINT & PREP EXIST DOOR AND FRAME

SPECIFIC DEMOLITION NOTES

1. REMOVE & DISPOSE OF EXISTING LOUVER ASSEMBLY. PREPARE OPENING FOR NEW DOOR.
2. REMOVE AND DISPOSE OF BRICK VENEER AND INSULATION
3. REMOVE AND DISPOSE OF TRANSLUCENT PANELS
4. REMOVE AND DISPOSE OF WINDOW AND FRAME
5. REMOVE AND DISPOSE OF DOOR AND FRAME
6. REMOVE AND DISPOSE OF METAL WALL PANEL ASSEMBLY
7. REMOVE AND DISPOSE OF CMU BLOCK
8. REMOVE & DISPOSE OF EXISTING CABINETINTRY. SHORE EXISTING COUNTER. COORDINATE NEW CABINETS WITH SPECIFICATION.

PLAN LEGEND

APPROXIMATE OUTLINE OF STRUCTRE / BUILDING TO BE DEMOLISHED
- CONTRACTOR TO V.I.F. EXACT DIMENSIONS IN FIELD

GENERAL DEMOLITION NOTES

1. CONTRACTOR SHALL VISIT THE SITE TO VERIFY AND BE FULLY AWARE OF EXISTING CONDITIONS PRIOR TO START OF WORK. CONTRACTOR SHALL IDENTIFY ALL EXISTING ITEMS OF WORK SCHEDULED TO REMAIN OR SALVAGED FOR REUSE.
2. ALL DEMOLITION WORK SHALL BE PERFORMED IN ACCORDANCE WITH STATE AND LOCAL REGULATIONS. CONTRACTOR SHALL SECURE AND PAY FOR ALL REQUIRED DEMOLITION PERMITS. THE CONTRACTOR SHALL MAKE ALL NECESSARY CONSTRUCTION NOTIFICATIONS AND APPLY FOR AND OBTAIN ALL NECESSARY CONSTRUCTION PERMITS/
3. COORDINATE ALL DEMOLITION OPERATIONS WITH OWNER FOR SHUTDOWN PERIODS AND SEQUENCE OF WORK. ARRANGE WITH OWNER AND/OR APPROPRIATE UTILITIES FOR SERVICE SHUTOFFS BEFORE BEGINNING DEMOLITION OPERATIONS. PROVIDE TEMPORARY DUST PARTITIONS, BARRICADES AND PROTECTIVE ENCLOSURES REQUIRED TO PROPERLY SECURE, ISOLATE AND WEATHERPROOF AREAS OF WORK AND EXISTING AREAS AND ELEMENTS TO REMAIN. THE CONTRACTOR SHALL PERFORM THE WORK OF THIS CONTRACT IN A MANNER THAT CAUSES NO DISRUPTION TO THE CONTINUOUS OCCUPATION OF THE BUILDING AND SITE FOR THEIR INTENDED PURPOSE.
4. REMOVE ALL DEMOLISHED MATERIALS IN ACCORDANCE WITH LOCAL REGULATIONS.
5. IT IS NOT THE INTENT TO SHOW EVERY PIECE OR ITEM TO BE REMOVED IN DEMOLITION WORK. PLUMBING, ELECTRICAL AND OTHER WORK RELATED TO A WALL, OR AREA SCHEDULED FOR DEMOLITION AND REMOVAL, SHALL BE PERFORMED WHETHER NOTED OR NOT.
6. THE EXTENT OF ALL SPECIFIC DEMOLITION WORK SHALL BE COORDINATED WITH CONTRACT DOCUMENTS.
7. CONTRACTOR TO PATCH/REPAIR/REFINISH, AS REQUIRED, ALL SURFACES EXPOSED BY DEMOLITION WORK WITH MATERIALS AND METHODS TO MATCH FINISH AND MAKE FLUSH WITH EXISTING ADJACENT SURFACES. WORK SHALL INCLUDE ALL LABOR AND MATERIALS ON ALL SURFACES REQUIRED TO RENDER SUBSTRATES ACCEPTABLE TO RECEIVE NEW FINISHES SPECIFIED IN ACCORDANCE WITH MANUFACTURER'S WRITTEN RECOMMENDATIONS.
8. TERMINATE, CAP, AND REMOVE ALL ABANDONED ELECTRICAL, PLUMBING, MECHANICAL AND FIRE PROTECTION ITEMS BACK TO ITS SOURCE. REFER TO MEP DRAWINGS FOR ADDITIONAL INFORMATION.
9. WHERE EXISTING FINISHES ARE INDICATED TO REMAIN AS BASE MATERIAL SURFACES FOR INSTALLATION OF NEW FINISHES, REMOVE ALL PROJECTIONS AND VOIDS AND SECURE OR REMOVE AND REPLACE ANY EXISTING LOOSE OR OTHERWISE UNSUITABLE SUBSTRATE MATERIAL.
10. REFER TO VARIOUS DISCIPLINE DEMOLITION PLANS FOR ADDITIONAL INFORMATION.
11. CONTRACTOR TO PROTECT ALL ITEMS TO REMAIN DURING DEMOLITION. ALL ITEMS DAMAGED DURING DEMOLITION ARE TO BE REPLACED AT NO EXPENSE TO THE OWNER.
12. CONTRACTOR IS RESPONSIBLE FOR MEANS & METHODS IN A SAFE MANNER FOR ALL DEMOLITION WORK.
13. THE CONTRACTOR SHALL BE SOLELY RESPONSIBLE FOR JOB SITE SAFETY AND ALL CONSTRUCTION MEANS AND METHODS. PRIOR TO BEGINNING CONSTRUCTION, CONTRACTOR SHALL WALK THE SITE WITH THE ARCHITECT TO GAIN A THOROUGH UNDERSTANDING OF THE PROJECT, INCLUDING ANY SPECIAL CONDITIONS AND CONSTRAINTS.

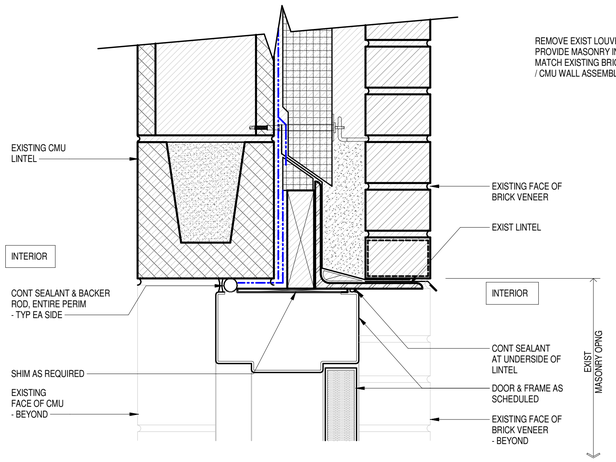

6 EXISTING MASONRY WALL - DOOR HEAD DETAIL
3" = 1'-0"

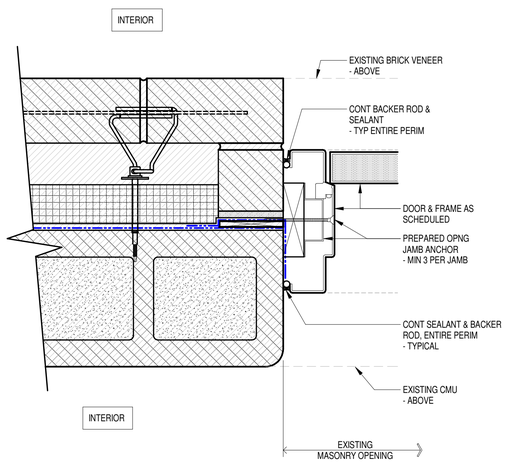

7 EXISTING MASONRY WALL - DOOR JAMB DETAIL
3" = 1'-0"

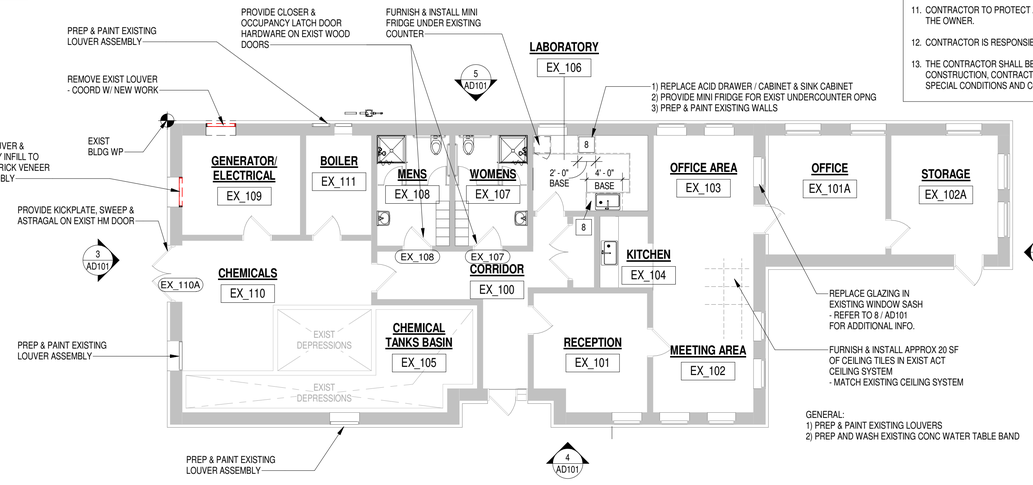

1 EXISTING BUILDING DEMOLITION FLOOR PLAN
1/8" = 1'-0" 1/ A201

NON-STOREFRONT GLAZING SCHEDULE

TYPE	DESCRIPTION	USE IN THESE LOCATIONS
1	1/4" CLEAR TEMPERED	ALL INTERIOR NON-FIRE RATED DOORS AND INTERIOR WINDOWS
2	1/4" CLEAR LAMINATED GLASS	AS INDICATED
3	5/16" - 3/8" CERAMIC FIRE RATED GLASS	ALL INTERIOR FIRE RATED DOORS & WINDOWS
4	1" CLEAR INSULATING TEMPERED GLASS	ALL EXTERIOR DOORS, CURTAIN WALL, STOREFRONT, & WINDOWS
5	1/4" TEMPERED FROSTED GLASS	AS INDICATED

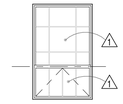

8 WINDOW ELEVATION
1/4" = 1'-0"

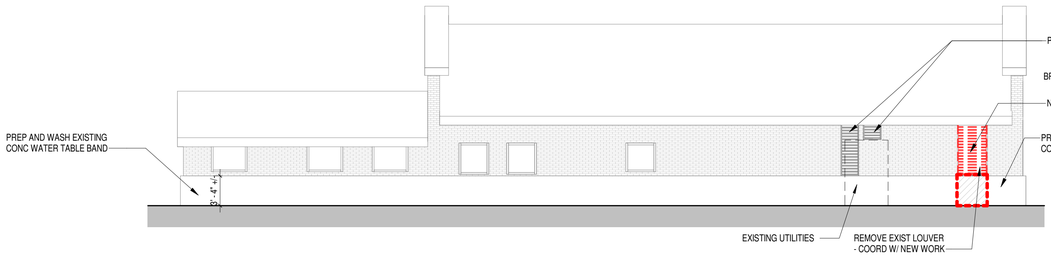

5 EXISTING BUILDING DEMOLITION ELEVATION WEST
1/8" = 1'-0" 1/ AD101

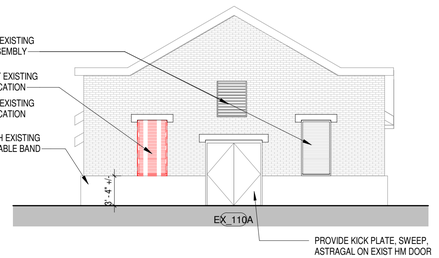

3 EXISTING BUILDING DEMOLITION ELEVATION SOUTH
1/8" = 1'-0" 1/ AD101

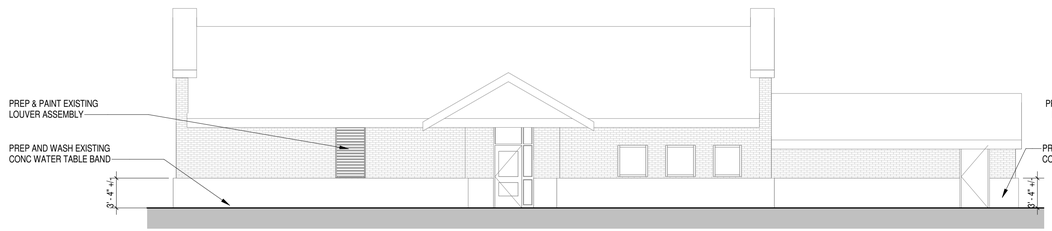

4 EXISTING BUILDING DEMOLITION ELEVATION EAST
1/8" = 1'-0" 1/ AD101

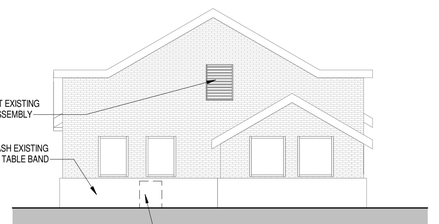

2 EXISTING BUILDING DEMOLITION ELEVATION NORTH
1/8" = 1'-0" 1/ AD101

Project:
TOWN OF BLACKSTONE, MASSACHUSETTS
DEPARTMENT OF PUBLIC WORKS
WATER TREATMENT PLANT
53 ELM STREET, BLACKSTONE, MASSACHUSETTS, 01504

Weston & Sampson
Weston & Sampson Engineers, Inc.
55 Walkers Brook Drive, Suite 100
Reading, MA 01867
978.532.1900 800.SAMPSON
www.westonandsampson.com

Consultants:

Revisions:

No.	Date	Description

COA:

"COPYRIGHT ©2021 BY WESTON & SAMPSON
THIS DRAWING HAS BEEN PREPARED FOR THE EXCLUSIVE USE OF THE CLIENT & PROJECT NAME LISTED ON THIS DRAWING ONLY.
REPRODUCTION, RELEASE OF UTILIZATION OF THE DRAWING CONTENT BY OTHER CLIENTS / FIRMS AND ON OTHER PROJECTS IS PROHIBITED BY LAW.
WESTON & SAMPSON RETAINS THE EXCLUSIVE USE OF THE INTELLECTIAL PROPERTY CONTAINED HEREIN.

Seal:
REGISTERED ARCHITECT — DANIEL G. TENNEY III — No. 6688 — CAMBRIDGE MA — COMMONWEALTH OF MASSACHUSETTS

Issued For:
BID DOCUMENTS

Scale: As indicated

Key Plan:

NORTH

Date:	MAY 21, 2021
Drawn By:	MMF
Reviewed By:	BPM
Approved By:	JRC
W&S Project No.:	2200740
W&S File No.:	246 - 100

Drawing Title:
DEMOLITION PLANS & ELEVATIONS

Sheet Number:
AD101

COPYRIGHT © 2021 WESTON & SAMPSON, INC.

6/1/2021 1:23:41 PM C:\Users\mcusker\OneDrive - WESTON & SAMPSON ENGINEERS, Inc\Documents\2200740_BlackstoneWTPDesign_Architecture_2020_mcusker.rvt

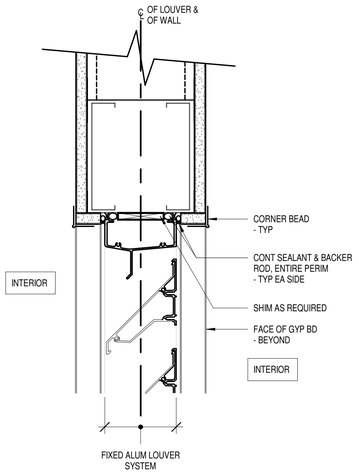

1 LOUVER HEAD DETAIL
3" = 1'-0" 3/ A801

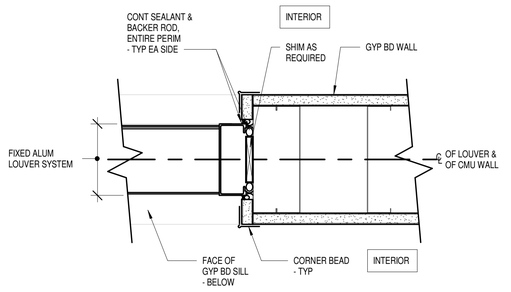

2 LOUVER JAMB DETAIL
3" = 1'-0" 3/ A801

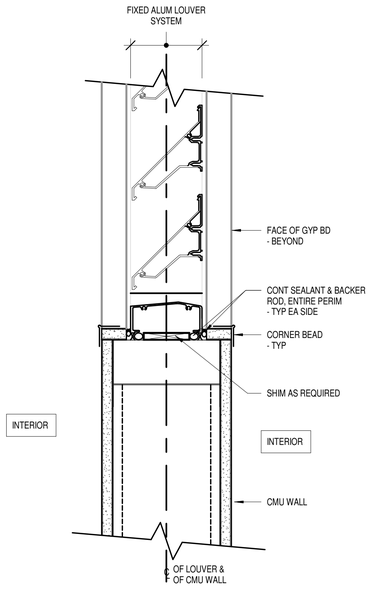

3 LOUVER SILL DETAIL
3" = 1'-0" 3/ A801

ABBREVIATION

A	
A/C	AIR CONDITION
AC	ACOUSTICAL
ACT	ACOUSTICAL CEILING TILE
ADJ	ADJACENT
AFF	ABOVE FINISH FLOOR
ALT	ALTERNATE
ALUM	ALUMINUM
ANC BLT	ANCHOR BOLT
ANOD	ANODIZED
APPROX	APPROXIMATE
ARCH	ARCHITECT
ARGB	ABUSE RESISTANT GYPSUM BOARD
ASPH	ASPHALT
AVB	AIR VAPOR BARRIER
B	
BC	BASE CABINET
BD	BOARD
BF	BRACE FRAME
BITUM	BITUMINOUS
BLDG	BUILDING
BLK	BLOCK
BLKG	BLOCKING
BM	BENCH MARK
BOF	BOTTOM OF FOOTING
BOS	BOTTOM OF STEEL
BOTT	BOTTOM
BPL	BEARING PLATE
BRG	BEARING
BRK	BRICK
BS	BRICK SHELF
BSMT	BASEMENT
BVL	BEVELED
C	
CAB	CABINET
CB	CEMENT BOARD / CATCH BASIN
CDM	CAVITY DRAINAGE MATERIAL
CF	CUBIC FEET
CH	CEILING HEIGHT
CIP	CAST IN PLACE
CJ	CONTROL JOINT
CL	CENTER LINE / COLUMN LINE
CL	CLOSET / CHAIN LINK
CLG	CEILING
CLOS	CLOSET
CLR	CLEAR
CMU	CONCRETE MASONRY UNIT
CNTR	COUNTER
CO	CASED OPENING
COL	COLUMN
COMP	COMPOSITION
CONC	CONCRETE
CONST	CONSTRUCTION
CONT	CONTINUOUS
CONTC	CONTRACTOR
CONV	CONVECTOR
COORD	COORDINATE
CORR	CORRIDOR
CPET	COMMON PATH OF EGRESS TRAVEL
CPT	CARPET
CT	CERAMIC TILE
CTR	CENTER
CW	COLD WATER
CWT	CERAMIC WALL TILE
CY	CUBIC YARD
D	
D	DRYER
D-PART	DEMOUNTABLE PARTITION
DBL	DOUBLE
DEMO	DEMOLITION
DF	DRINKING FOUNTAIN
DH	DOUBLE HUNG
DI	DRAIN INLET
DIA	DIAMETER
DIAG	DIAGONAL
DIM	DIMENSION
DIST	DISTANCE
DL	DRAIN LEADER
DN	DOWN
DR	DOOR
DS	DOWNSPOUT
DTL	DETAIL
DW	DISHWASHER
DWG	DRAWING
E	
EA	EACH
EF	EACH FACE
EIFS	EXTERIOR INSULATED FINISH SYSTEM
EJ	EXPANSION JOINT
EL	ELEVATION
ELEC	ELECTRIC
ELEV	ELEVATOR
EMER	EMERGENCY
ENCL	ENCLOSURE
EOC	EDGE OF CONCRETE
EP	ELECTRICAL PANEL
EQ	EQUAL
EQUIP	EQUIPMENT
ER	EXISTING TO REMAIN
ES	EXPOSED STRUCTURE
EW	EACH WAY
EXH	EXHAUST
EXIST	EXISTING
EXP	EXPANSION
EXT	EXTERIOR
F	
FA	FIRE ALARM
FAAP	FIRE ALARM ANNUNCIATOR PANEL
FACP	FIRE ALARM CONTROL PANEL
FAK	FIRST AID KIT
FB	FIRE BLANKET
FC	FILE CABINET
FD	FLOOR DRAIN
FE	FIRE EXTINGUISHER
FEC	FIRE EXTINGUISHER CABINET
FF	FINISH FLOOR
FFE	FINISH FLOOR ELEVATION
FG	FIBERGLASS
FIN	FINISH
FLASH	FLASHING
FLR	FLOOR
FLUOR	FLUORESCENT
FOC	FACE OF CONCRETE
FOF	FACE OF FINISH
FOM	FACE OF MASONRY
FOS	FACE OF STUD
FOUND	FOUNDATION
FP	FIREPROOF(ING)
FR	FIRE RETARDANT
FRP	FIBERGLASS REINFORCED WALL PANEL
FRTW	FIRE RETARDANT TREATED WOOD
FSB	FILED SUB BID
FT	FEET
FTG	FOOTING
FUR	FURRING
G	
GA	GAUGE
GALV	GALVANIZED
GB	GRAB BAR
GC	GENERAL CONTRACTOR
GDRL	GUARD RAIL
GL	GLASS
GLAZ	GLAZED BLOCK
GLB	GLASS BLOCK
GN	GOOSENECK
GRT	GROUT
GWB	GYPSUM WALL BOARD
H	
HB	HOSE BIB
HC	HANDICAP
HD	HEAVY DUTY
HDWR	HARDWARE
HM	HOLLOW METAL
HOR	HORIZONTAL
HP	HIGH POINT
HT	HEIGHT
HTR	HEATER
HVAC	HEATING, VENTILATING, & AIR CONDITIONING
HW	HOT WATER
I	
ID	INSIDE DIAMETER
IN	INCH
INCL	INCLUDED
INFO	INFORMATION
INSUL	INSULATION
INT	INTERIOR
INV	INVERT
IRGWB	IMPACT-RESISTANT GWB
J	
JAN	JANITOR
JST	JOIST
JT	JOINT
K	
KD	KNOCK-DOWN
KIP	1,000 LBS
KO	KNOCKOUT
KPLT	KICKPLATE
L	
L	LENGTH
LAM	LAMINATE
LAV	LAVATORY
LBL	LABEL
LC	LEAD COATED
LCC	LEAD COATED COPPER
LGMF	LIGHT-GAUGE METAL FRAMING
LIN	LINOLEUM
LLH	LONG LEG HORIZONTAL
LLV	LONG LEG VERTICAL
LP	LOW POINT
LSC	LIFE SAFETY CODE
LT	LIGHT
M	
M	METER
MANUF	MANUFACTURER
MAS	MASONRY
MAT	MATERIAL
MAX	MAXIMUM
MB	MOISTURE BARRIER
MBL	MARBLE
MBM	METAL BUILDING MANUFACTURER
MBR	MEMBER
MC	MEDICINE CABINET
MDF	MEDIUM DENSITY FIBERBOARD
MDO	MEDIUM DENSITY OVERLAY
MECH	MECHANICAL
MFR	MANUFACTURER
MH	MANHOLE
MIN	MINIMUM
MIR	MIRROR
MISC	MISCELLANEOUS
ML	MATCH LINE
MLDG	MOULDING
MO	MASONRY OPENING
MOD	MODULAR
MR	MOISTURE RESISTANT
MRGB	MOISTURE RESISTANT GYPSUM BOARD
MS	METAL STUD
MTD	MOUNTED
MTL	METAL
MTP	METAL TOILET PARTITION
N	
N/A	NOT APPLICABLE
NAT	NATURAL
NIC	NOT IN CONTRACT
NO	NUMBER
NOM	NOMINAL
NTS	NOT TO SCALE
NUM	NUMBER
NW	NEW
O	
OA	OVERALL
OC	ON CENTER
OD	OUTSIDE DIAMETER
OH	OVERHEAD DOOR
OPNG	OPENING
OPP	OPPOSITE
OPPHAND	OPPOSITE HAND
OSB	ORIENTED STRAND BOARD
OTS	OPEN TO STRUCTURE
OW	OPERABLE WALL
OZ	OUNCE
P	
PART BD	PARTICLE BOARD
PAV	PAVING
PCP	PRECAST CONCRETE PLANK
PERIM	PERIMETER
PL	PROPERTY LINE / PLATE
PLAM	PLASTIC LAMINATE
PLAS	PLASTIC
PLY	PLYWOOD
PMJF	PRE-MOLDED JOINT FILLER
PNT	PAINT
PR	PAIR
PREFIN	PREFINISHED
PRFB	POURED RESIN FLOOR BASE
PSF	POUNDS PER SQUARE FOOT
PSI	POUNDS PER SQUARE INCH
PT	PRESSURE TREATED
PTD	PAPER TOWEL DISPENSER
PTD	PAINTED
PTN	PARTITION
PVC	POLYVINYL CHLORIDE
PVMT	PAVEMENT
Q	
QT	QUARRY TILE
R	
R	RISER
R & D	REMOVE & DISPOSE
R & R	REMOVE AND REPLACE
R & S	REMOVE AND SALVAGE
RAD	RADIUS
RCP	REFLECTED CEILING PLAN
RD	ROOF DRAIN
REF	REFRIGERATOR
REFURB	REFURBISH
REINF	REINFORCEMENT
RELOC	RELOCATED
REM	REMOTE
REQ'D	REQUIRED
RES	RESILIENT
REV	REVISION
RFG	ROOFING
RFI	RIGID FOAM INSULATION
RFS	RESINOUS FLOOR SYSTEM
RH	RIGHT HAND
RL	ROOF LADDER
RM	RUBBER MAT
RM	ROOM
RO	ROUGH OPENING
RT	RUBBER TILE
RTU	ROOF TOP UNIT
RUB	RUBBER
S	
S	SEALANT
S.L.	STRUCTURAL LINE
SACI	SPRAY-APPLIED CELLULOSE INSULATION
SACP	SECURITY ALARM CONTROL PANEL
SAFI	SPRAY-APPLIED FOAM INSULATION
SCHED	SCHEDULE
SCR	SHOWER CURTAIN ROD
SCW	SOLID CORE WOOD
SD	SOAP DISPENSER
SECT	SECTION
SF	SQUARE FEET
SH	SINGLE HUNG
SHR	SHOWER
SIM	SIMILAR
SND	SANITARY NAPKIN DISPENSER
SNV	SANITARY NAPIKIN VENDOR
SOLSUR	SOLID SURFACE (COUNTER)
SPC	SPECIAL
SPEC	SPECIFICATION
SQ	SQUARE
SR	SHEET RUBBER
SS	STAINLESS STEEL
STD	STANDARD
STL	STEEL
STOR	STORAGE
STRUCT	STRUCTURE or STRUCTURAL
SUSP	SUSPENDED or SUSPENSION
SV	SHEET VINYL
SYS	SYSTEM(S)
T	
T & B	TOP AND BOTTOM
T & G	TONGUE AND GROOVE
TB	TRASH BARREL
TBA	TO BE ABANDONED
TBB	TILE BACKER BOARD
TBD	TO BE DETERMINED
TBOC	TOP BACK OF CURB
TEL	TELEPHONE
TEMP	TEMPORARY
THK	THICK(NESS)
THRESH	THRESHOLD
TOC	TOP OF CONCRETE
TOF	TOP OF FOOTING
TOL	TOP OF LANDING
TOP	TOP OF PLATE
TOS	TOP OF STEEL
TOW	TOP OF WALL
TP	TRANSLUCENT PANEL
TR	TREAD
TS	TUBULAR STEEL
TTD	TOILET TISSUE DISPENSER
TW	TO WEATHER
TYP	TYPICAL
U	
UC	UNDERCUT
UG	UNDERGROUND
UND	UNDERSIDE (OF DECK)
UNFIN	UNFINISHED
UNO	UNLESS NOTED OTHERWISE
UV	UNIT VENTILATOR
V	
VB	VINYL BASE / VAPOR BARRIER
VCT	VINYL COMPOSITION TILE
VERT	VERTICAL
VEST	VESTIBULE
VIF	VERIFY IN FIELD
VPD	VENEER PLASTER BASE
VS	VENT STACK
VT	VINYL TREAD
VTS	VINYL TRANSITION STRIP
VWB	VINYL WALL BASE
VWC	VINYL WALL COVERING
W	
W	WASHER
W/	WITH
W/O	WITHOUT
WB	WOOD BASE
WC	WALL CABINET
WD	WOOD
WDC	WATERPROOFING, DAMPPROOFING, & CAULKING CONTRACTOR
WF	WIRE FABRIC
WG	WIRE GLASS
WH	WALL HUNG
WIN	WINDOW
WP	WATER PROTECTION
WPG	WATERPROOF(ING)
WR	WATER RESISTANT
WS	WATER STOP
WT	WEIGHT
WWF	WELDED WIRE FABRIC

SYMBOLS

EXTERIOR ELEVATION

INTERIOR ELEVATION

BUILDING SECTION

WALL SECTION

DETAIL

PARTITION TYPE

EXTERIOR WALL ASSEMBLY

DOOR TYPE or VISION PANEL (VP)

WINDOW TYPE

ROOF TYPE

SPECIFIC DEMOLITION NOTE

SPECIFIC CONSTRUCTION NOTE

CHANGE IN PLANE

LEADER

DIMENSION

CHANGE IN ELEVATION

CONTROL JOINT

ELEVATION or WORK POINT (WP)

COLUMN GRID

EXISTING COLUMN GRID

ALIGN SURFACES

REVISION MARKER

ROOM TAG

DRAWING TITLE (ORIGINAL TAG REFERENCE LOCATED NEXT TO SCALE)

RIGID/SEMI-RIGID INSULATION

CONCRETE

SAND / P.C. CONCRETE

PARTICLE BOARD/MDF

PLYWOOD/MDO

FINISH WOOD

ALUMINUM

STEEL

PVC

CONCRETE MASONRY UNIT

BRICK

EARTH

GRAVEL

SPRAY FOAM

INSULATED METAL PANELS

GRAVEL

WOOD STUDS/FRAMING (DIMENSIONAL LUMBER)

WOOD BLOCKING

BATT INSULATION / SOUND ATTENUATION BLANKET

MATCHLINE

Project:

TOWN OF BLACKSTONE, MASSACHUSETTS
DEPARTMENT OF PUBLIC WORKS

WATER TREATMENT PLANT

53 ELM STREET, BLACKSTONE, MASSACHUSETTS, 01504

Weston & Sampson Engineers, Inc.
55 Walkers Brook Drive, Suite 100
Reading, MA 01867
978.532.1900 800.SAMPSON
www.westonandsampson.com

Consultants:

Revisions:

No.	Date	Description

COA:

©COPYRIGHT ©2021 BY WESTON & SAMPSON
THIS DRAWING HAS BEEN PREPARED FOR THE EXCLUSIVE USE OF THE CLIENT & PROJECT NAME LISTED ON THIS DRAWING ONLY.

REPRODUCTION, RELEASE OF UTILIZATION OF THE DRAWING CONTENT BY OTHER CLIENTS / FIRMS AND ON OTHER PROJECTS IS PROHIBITED BY LAW.

WESTON & SAMPSON RETAINS THE EXCLUSIVE USE OF THE INTELLECTUAL PROPERTY CONTAINED HEREIN.

Seal:

REGISTERED ARCHITECT DANIEL G. TENNEY III No. 6688 CAMBRIDGE MA COMMONWEALTH OF MASSACHUSETTS

Issued For:

BID DOCUMENTS

Scale: 3" = 1'-0"

Key Plan:

Date:	MAY 21, 2021
Drawn By:	MMF
Reviewed By:	BPM
Approved By:	JRC
W&S Project No.:	2200740
W&S File No.:	246 - 99

Drawing Title:

ABBREVIATIONS, SYMBOLS, LEGEND AND GENERAL NOTES

Sheet Number:

A011

COPYRIGHT © 2021 WESTON & SAMPSON, INC.

6/1/2021 1:21:46 PM C:\Users\mcuskerb\OneDrive - WESTON & SAMPSON ENGINEERS, Inc\Documents\2200740_BlackstoneWTPDesign_Architecture_2020_mcuskerb.rvt

GENERAL NOTES

1. COORDINATE THE ARCHITECTURAL DRAWINGS WITH STRUCTURAL, PLUMBING, HVAC, PROCESS, AND ELECTRICAL / FIRE ALARM DRAWINGS FOR THE VERIFICATION OF ALL PROJECT REQUIREMENTS.

2. FINISH FIRST FLOOR SLAB ELEVATION HIGH POINT IS 192.7' FOR THIS PROJECT.

3. ALL INTERIOR DIMENSIONS ARE TAKEN FROM FACE OF STUD TO FACE OF STUD / FACE OF MASONRY UNLESS SPECIFICALLY NOTED OTHERWISE. DO NOT SCALE DRAWINGS, REFER TO ENLARGED PLANS AND DETAILS FOR FURTHER DIMENSIONING INFORMATION. ALL WORK LINES AND LEVELS SHALL BE LAID OUT BY WRITTEN DIMENSIONS. ANY DEVIATIONS SHALL BE BROUGHT TO THE ATTENTION OF THE DESIGNER. ALL DEVIATIONS AND DISCREPANCIES SHALL BE CORRECTED BY THE CONTRACTOR BEFORE HE BEGINS HIS PORTION OF THE WORK.

4. FIRE EXTINGUISHER AND CABINET QUANTITIES AND LOCATIONS TO BE COORDINATED WITH THE TOWN FIRE DEPARTMENT PRIOR TO ORDERING AND INSTALLATION. CONFORM TO THE STATE FIRE REGS AND NFPA.

5. COORDINATE MASTER BOX, KNOX BOX, AND BEACON LOCATIONS WITH THE ELECTRICAL / FIRE ALARM DRAWINGS AND THE TOWN FIRE DEPARTMENT REQUIREMENTS. ELECTRICAL CONTRACTOR TO PROVIDE KNOX BOX THAT MEET THE TOWN FIRE DEPARTMENT REQUIREMENTS.

6. THE CONTRACTOR SHALL FIELD VERIFY ALL DIMENSIONS & CONDITIONS PRIOR TO THE WORK AND SHALL NOTIFY THE DESIGNER REGARDING ANY DISCREPANCIES.

7. THE CONTRACTOR SHALL SUBMIT ALL SHOP DRAWINGS, SAMPLES, CATALOG CUTS ECT., INCLUDING COLOR CHARTS FOR PAINTS, FOR ALL INTERIOR FINISHES, TO THE DESIGNER FOR SELECTION, REVIEW AND APPROVAL WITH THE OWNER PRIOR TO FABRICATION OR INSTALLATION. THE COLORS MUST BE SUBMITTED IN A TIMELY MANNER AND TOGETHER FOR REVIEW AND COLOR BOARDS. FAILURE TO DO SO IN A TIMELY MANNER WILL FALL ON THE CONTRACTOR'S RESPONSIBILITY AND NOT ON THE OWNER. REFER TO EACH INDIVIDUAL SPECIFICATIONS FOR SIZE, QUANTITY AND TYPE OF COLOR SELECTION.

8. PERFORM ALL WORK IN ACCORDANCE WITH THE STATE BUILDING CODE, AS WELL AS LOCAL CODES AND ORDINANCES.

9. THE CONTRACTOR SHALL BE RESPONSIBLE FOR ALL PERMITS, BACKCHARGES AND FEES AS REQUIRED BY THE TOWN.

10. THE CONTRACTOR SHALL BE RESPONSIBLE FOR DAILY REMOVAL AND LEGAL DISPOSAL OF ALL DEBRIS OFF SITE.

11. THE CONTRACTOR SHALL SEAL ALL THROUGH-WALL & FLOOR PENETRATIONS WITH 3M BARRIER CAULK (O.A.E.) AND SEALANT ON USG SAFING 2500 PSI GROUT. U.N.O. INSTALL ANY REQUIRED FIRE RATED PARTITIONS TO UNDERSIDE OF FLOOR AND ROOF DECK, INCLUDING DEFLECTION HEAD FIRE SAFING.

12. INSTALL A CONTINUOUS SEALANT BEAD ON BACKER ROD AT ALL JUNCTURES OF DISSIMILAR MATERIALS (E.G.: METAL TO CMU, STEEL TO ALUMINUM) AND ALL MATERIAL JOINTS AS REQUIRED BY THE MANUFACTURER'S SPECIFICATION AND RECOMMENDATIONS, INDUSTRY STANDARDS AND GOOD PRACTICE.

13. PROVIDE CONTINUOUS GALVANIZED METAL EDGE TRIM AT ALL GWB WORK.

14. THE CONTRACTOR SHALL INSTALL ALL INTERIOR FINISHES AT ALL SURFACES INDICATED ON THE DRAWINGS IN CONFORMANCE TO STATE BUILDING CODE. ALL DOORS SHALL HAVE LEVER HARDWARE TO CONFORM TO 521 CMR.

15. INSTALL USG .093 (OR APPROVED EQUAL) CONTROL JOINTS AT 30'-0" O.C. MAX. OR AS PER MANUFACTURER'S SUGGESTED DETAILS AND SPECIFICATIONS.

16. THE CONTRACTOR IS RESPONSIBLE FOR PROVIDING A GAP FILLING SYSTEM OR OTHER SYSTEM WHICH SPANS ANY GAP IN THE EXTERIOR WALL SYSTEM WHICH DOES NOT MEET THE MAXIMUM SPAN OF THE APPROVED AIR BARRIER MEMBRANE SYSTEM. THIS SYSTEM SHALL BE PROVIDED TO ALLOW FOR A COMPLETE AIR BARRIER MEMBRANE INSTALLATION. THE SYSTEM SHALL BE COMPATIBLE WITH THE APPROVED AIR BARRIER PRODUCT AND SHALL BE APPROVED BY THE DESIGNER PRIOR TO INSTALLATION.

17. NOT USED.

18. ALL STRUCTURAL ELEMENTS WHICH PASS IN FRONT OF WINDOWS / CLERESTORIES SHALL BE BACK PAINTED.

19. ALL STRUCTURAL ELEMENTS SHOWN ON THE ARCHITECTURAL DRAWINGS ARE FOR INFORMATION ONLY. REFER TO STRUCTURAL DRAWINGS FOR EXACT SIZES AND LOCATION OF STRUCTURAL ELEMENTS.

20. THE CONTRACTOR SHALL PROVIDE SUPPLEMENTAL FRAMING AND OR BLOCKING AS NECESSARY TO SUPPORT ALL EXTERIOR WALL MOUNTED ELEMENTS.

21. ALL OPENINGS IN EXTERIOR WALLS FOR PLUMBING, FIRE PROTECTION, MECHANICAL, AND ELECTRICAL / FIRE ALARM SYSTEMS SHALL BE SEALED WEATHER-TIGHT BY THE CONTRACTOR. CONTRACTOR TO PROVIDE FIRE RATED SEALANTS AS REQUIRED AT FIRE RATED WALL, FLOOR, CEILING, AND ROOF ASSEMBLIES.

22. THE CONTRACTOR IS TO FIELD MEASURE OH DOOR OPENINGS TO ENSURE PROPER FIT OF OH DOORS.

23. ALL EXPOSED SURFACES (INCLUDING, BUT NOT LIMITED TO; WALLS, UNDERSIDE OF EXPOSED ROOF AND FLOOR DECK, STRUCTURAL STEEL, MISCELLANEOUS METALS, DOORS/FRAMES, DUCTWORK, CONDUIT, AND PIPING) SHALL BE PRIMED AND PAINTED.

24. BLOCKING SHALL BE PROVIDED FOR ALL WALL MOUNTED EQUIPMENT (INCLUDING, BUT NOT LIMITED TO; PLUMBING FIXTURES, TOILET ACCESSORIES, UTILITY SINKS, FIRE EXTINGUISHER CABINETS, SHELVING, COUNTERS, CASEWORK, CABINETS, MEDIA EQUIPMENT, AND WINDOW TREATMENTS), PROVIDE ADDITIONAL METAL STUD FRAMING AS REQUIRED TO SUPPORT BLOCKING.

25. THE AIR BARRIER MEMBRANE (ABM) SHALL BE CONTINUOUS THROUGH THE BUILDING ENVELOPE AND BETWEEN THE WALL AND ROOF SYSTEMS INSTALLED ON THE WINTER WARM SIDE OF THE INSULATION. OPENINGS AND PENETRATIONS IN THE BUILDING ENVELOPE SHALL BE SEALED WITH SEALANT MATERIALS OR CLOSED WITH GASKETING SYSTEMS WHICH IS COMPATIBLE WITH THE ABM SYSTEM AND MEETS THE PERFORMANCE REQUIREMENTS IN THE SPEC. SYSTEM SHALL BE COMPATIBLE WITH THE CONSTRUCTION MATERIALS AND LOCATION. JOINTS AND SEAMS SHALL BE SEALED IN THE SAME MANNER OR TAPED OR COVERED WITH A MOISTURE VAPOR-PERMEABLE WRAPPING MATERIAL. SEALING MATERIALS SPANNING JOINTS BETWEEN CONSTRUCTION MATERIALS SHALL ALLOW FOR EXPANSION AND CONTRACTION OF THE CONSTRUCTION MATERIALS. AT ALL OH DOOR JAMBS AND HEADERS, THE ABM SHALL TERMINATE AT THE STEEL FACE WHERE THE INSULATION ABUTS STEEL FRAMED OPENINGS. TERMINATE ABM ON THE INSIDE FACE OF EXTERIOR WALL SYSTEM AT DOORS, WINDOWS, LOUVERS, AND CLERESTORIES. THE TERMS VAPOR RETARDER, AND AIR MOISTURE BARRIER ARE SYNONYMOUS WITH ABM.

26. METAL BUILDING SYSTEM SHALL BE A SINGLE SOURCE MANUFACTURED SYSTEM. ALL ACCESSORIES, NOT LIMITED TO; PRIMARY FRAMING, WALLS, ROOF INSULATION, EXTRUSIONS, TRIMS, FASTENERS, GASKETS, SUBGIRT FRAMING, ECT SHALL BE PROVIDED BY THE METAL BUILDING SYSTEM MANUFACTURER. METAL WALL PANEL COLOR TO BE SELECTED BY THE DESIGNER FROM THE MANUFACTURES STANDARD COLOR SELECTION WITH FINISH PROTECTIONS AS SPECIFIED.

27. ALL WALL/PARAPET FLASHING SHALL TERMINATE WITH A MINIMUM 8" VERTICAL LEG TO ALLOW FOR PROPER INTERFACE WITH THE ABM. ABM SHALL BE INSTALLED BEHIND FLASHING AND THE FLASHING SHALL BE INTEGRATED INTO THE ABM SYSTEM USING A SELF-ADHERED MEMBRANE FLASHING WITH MINIMUM OVERLAP REQUIREMENTS PER MANUFACTURER.

28. ALL EXTERIOR AND INTERIOR MATERIAL SURFACE COLOR AND TEXTURES SHALL BE SELECTED BY THE DESIGNER FROM THE MANUFACTURES STANDARD & PREMIUM FINISH / COLOR SELECTIONS. ONCE ALL COLORS HAVE BEEN SUBMITTED, THE OWNER WILL REVIEW AND PROVIDE GUIDANCE ON COLORS FOR INCLUSION IN THE MOCK-UP REFERENCED IN DIVISION 1 OF THE SPECIFICATIONS.

29. DETAILS AND NOTES SHOWN ON THE ARCHITECTURAL DRAWINGS SHALL BE APPLICABLE TO ALL PARTS OF THE ARCHITECTURAL WORK EXCEPT WHERE SPECIFICALLY REQUIRED OTHERWISE BY THE CONTRACT DOCUMENTS. CONDITIONS NOT SPECIFICALLY SHOWN SHALL BE SIMILAR TO THOSE SHOWN FOR LIKE CONDITIONS AS DETERMINED BY THE DESIGNER.

30. PROVIDE ALL ACCESSIBLE FIXTURES, CONTROLS & ACCESSORIES, AND APPROPRIATE CLEARANCES, AS REQUIRED FOR COMPLIANCE W/ STATE BUILDING CODE W/ ALL AMENDMENTS, TYP.

31. SEALANT DEPTH AT ALL EXTERIOR OPENINGS SHALL BE EQUAL TO THE WIDTH OF THE JOINT.

32. NOT USED.

33. FOR SITE LEGEND REFER TO DRAWING SERIES G000.

34. FOR STRUCTURAL LEGEND REFER TO DRAWING SERIES S001.

35. FOR WALL TYPES, REFER TO DRAWING SERIES A021.

36. ALL DIMENSIONS ARE TO FACE OF MASONRY, FACE OF METAL STUD, AND TO THE CENTERLINE OF COLUMN, UNLESS OTHERWISE NOTED.

40. FOR DOOR NUMBERS AND DETAILS, REFER TO DRAWING SERIES A801.

43. FOR FINISH SCHEDULE, REFER TO DRAWING SERIES A101.

44. FOR PLUMBING LEGEND, REFER TO DRAWING SERIES P000.

46. FOR MECHANICAL LEGEND, REFER TO DRAWING SERIES H000.

47. FOR ELECTRICAL LEGEND, REFER TO DRAWING SERIES E001.

48. ALL NOTES AND DIMENSIONS DESIGNATED "TYPICAL" APPLY TO ALL LIKE OR SIMILAR CONDITIONS THROUGHOUT THE PROJECT.

49. SIGNAGE TO BE MOUNTED ON THE WALL, ADJACENT TO THE LEVER SIDE OF THE DOOR, AT A HEIGHT OF FIVE (5) FEET A.F.F. REFER TO THE FLOOR PLANS FOR LOCATIONS OF DIRECTIONAL SIGNAGE.

50. CONTRACTOR(S) TO TAKE AND VERIFY ALL DIMENSIONS AND CONDITIONS OF THE WORK AND BE RESPONSIBLE FOR COORDINATION OF THE SAME. FIELD VERIFY ALL EXISTING CONDITIONS PRIOR TO START OF WORK.

TYPICAL DEVICE MOUNTING HEIGHTS

ELECTRICAL EQUIPMENT MOUNTING HEIGHT DIMENSIONS ARE TO CENTER OF DEVICE UNLESS OTHERWISE NOTED:

- RECEPTACLES: 18" A.F.F. AT LOCATIONS ABOVE CASEWORK, MOUNT BOTTOM OF RECEPTACLE AT 2" ABOVE BACKSPLASH. AT LOCATIONS BELOW CASEWORK, MOUNT AT 24" A.F.F.
- EXTERIOR RECEPTACLES: 24" A.F.F.
- SWITCHES: 48" A.F.F.
- BOILER EMERGENCY SWITCH: 60" A.F.F.
- DATA/PHONE OUTLETS: 18" A.F.F.
- FIRE ALARM PULL STATIONS: 48" A.F.F.
- EMERGENCY SHUT-OFF SWITCH/PUSH BUTTON: 48" A.F.F.
- EMERGENCY CALL SWITCH: 36" A.F.F.
- EMERGENCY CALL BELL/LIGHT: 7'-6" A.F.F.
- FIRE ALARM VISUAL/AUDIO INDICATING UNITS: 6'-8" TO BOTTOM OF DEVICE.
- WALL MOUNTED EXIT SIGNS: 8" ABOVE DOOR OR 7'-6" A.F.F.

DOOR HARDWARE MOUNTING HEIGHT DIMENSIONS ARE TO CENTER OF HARDWARE:

- PULL: 42"
- PUSH PLATE: 45"

PLUMBING FIXTURE SCHEDULE / MOUNTING HEIGHTS

3/8" = 1'-0"

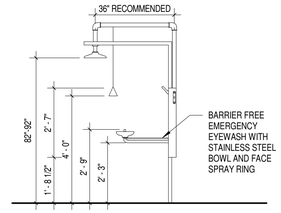

EMERGENCY EYEWASH AND SHOWER

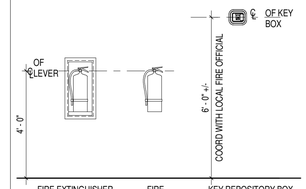

FIRE EXTINGUISHER W/ SEMI-RECESSED CABINET (FEC)

FIRE EXTINGUISHER (FE)

KEY REPOSITORY BOX (KRB)
- REFER TO FIRE ALARM DRAWINGS FOR ADDITIONAL INFO

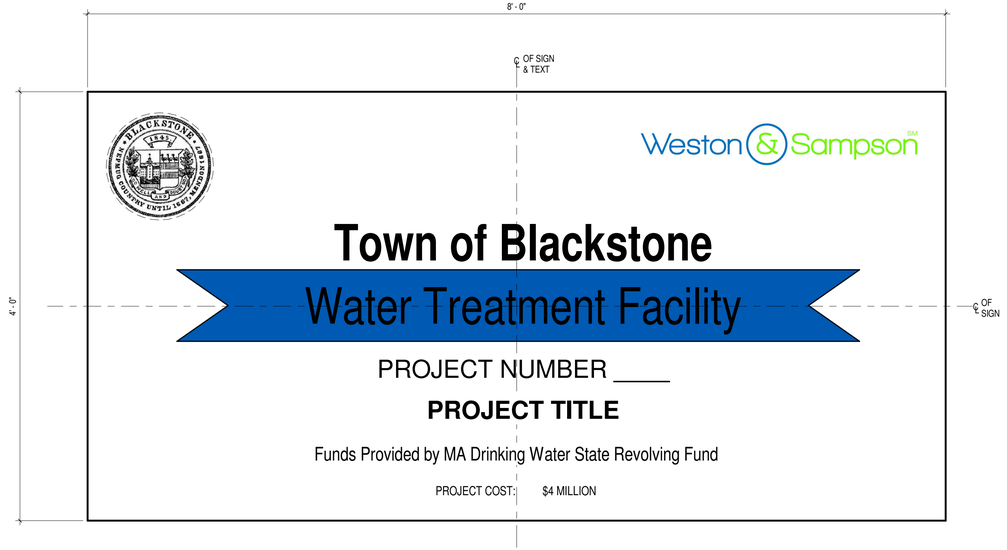

NOTE:
- THIS SIZE IS 4'-0" X 8'-0"
- THE MATERIAL WILL BE PRINTED VINYL LAMINATED AND APPLIED TO 3 mm MAX METAL SUPPLIER HAS DRAWN BORDER AROUND SIGN. PLEASE ADVISE ON WHETHER THE BORDER IS WANTED.

G.C. TO ADEQUATELY MOUNT SIGN AT APPROVED LOCATION.

PROVIDE PROJECT COST AS REQUIRED ON SIGN.

1 CONSTRUCTION SIGN
1 1/2" = 1'-0"

WALL TYPE NOTES

1. WALL TYPES LISTED REPRESENT SEVERAL TYPES OF WALL CONSTRUCTION, ALL OF WHICH MAY NOT BE USED ON THIS PROJECT. REFER TO FLOOR PLANS FOR WALL TYPE DESIGNATIONS.
2. AT ALL NON-FIRE RATED PARTITIONS, FILL VOIDS WITH SOUND ATTENUATION INSULATION INCLUDING, BUT NOT LIMITED TO, FLUTES IN METAL FLOOR / ROOF DECK, VOIDS BETWEEN PARTITIONS AND STRUCTURAL MEMBERS, PENETRATIONS OF DUCTWORK, ELECTRICAL CONDUIT, PIPING, ETC.
3. GYPSUM BOARD USED IN A ONE, TWO, OR THREE HOUR FIRE-RESISTANCE RATED PARTITION MUST BEAR THE U.L. CLASSIFICATION MARKING.

   FIRE-RESISTANCE RATED CONSTRUCTION:
4. ALL FIRE-RESISTANCE RATED PARTITIONS RESIST THE PASSAGE OF SMOKE AND ARE CONSIDERED SMOKE RESISTANT WITHOUT THE ASTERISK DESIGNATION. EXTEND ALL FIRE-RESISTANCE RATED PARTITIONS TO THE UNDERSIDE OF METAL FLOOR/ROOF DECK AND/OR STRUCTURE ABOVE. PENETRATIONS AND VOIDS SHALL BE FIRESTOPPED IN ACCORDANCE WITH SPECIFICATION SECTION "FIRESTOPPING". ALL HEAD-OF-WALL JOINTS AND FLOOR-TO-WALL JOINTS SHALL BE SEALED IN ACCORDANCE WITH SPECIFICATION SECTION "FIRE-RESISTIVE JOINT SYSTEMS."

WALL TYPE

(HEIGHT OF WALL IF APPLICABLE, IF NO DIMENSION, THEN WALL IS TO UNDERSIDE OF DECK)

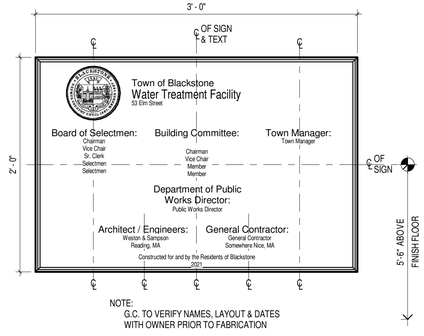

NOTE:
G.C. TO VERIFY NAMES, LAYOUT & DATES WITH OWNER PRIOR TO FABRICATION

2 DEDICATION PLAQUE
1 1/2" = 1'-0"

EXTERIOR WALL ASSEMBLIES

TYPE A

LOWER WALL ASSEMBLY
EXTERIOR
- 2 3/8" CONCRETE FACED RIGID INSULATION BOARD (R-10)
- 8" CONCRETE BACK-UP WALL

INTERIOR

UPPER WALL ASSEMBLY
EXTERIOR
- 4" VERTICAL INSULATED METAL PANEL, MIN R-26, BRAKE METAL TRIM, BY MBM
- 8" COLD FORMED STEEL GIRTS, BY MBM
- STEEL BUILDING FRAME, BY MBM

INTERIOR

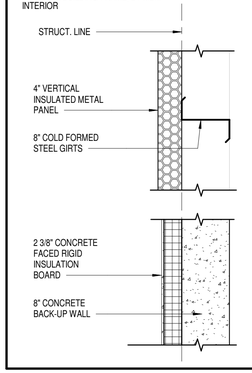

INTERIOR WALL PARTITIONS

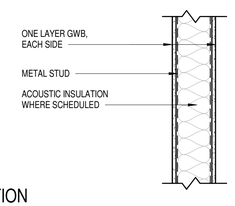

SECTION

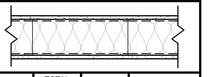

PLAN

MARK	CORE SIZE	GWB THICK	GWB HEIGHT	TOTAL PARTITION THICK	ACOUSTIC INSUL	FIRE RATING / UL DESIGN NO.
6	6"	5/8"	FULL HEIGHT	7 1/4"	NO	-
6A	6"	5/8"	FULL HEIGHT	7 1/4"	YES	-
6B	6"	5/8"	6" ABOVE FINISHED CLG.	7 1/4"	NO	-
6C	8"	5/8"	FULL HEIGHT	9 1/4"	NO	-

6 — 6" METAL STUD - 1 LAYER GWB - BOTH SIDES

Project:
TOWN OF BLACKSTONE, MASSACHUSETTS
DEPARTMENT OF PUBLIC WORKS
WATER TREATMENT PLANT
53 ELM STREET, BLACKSTONE, MASSACHUSETTS, 01504

Weston & Sampson
Weston & Sampson Engineers, Inc.
55 Walkers Brook Drive, Suite 100
Reading, MA 01867
978.532.1900 800.SAMPSON
www.westonandsampson.com

Consultants:

Revisions:

No.	Date	Description

COA:

"COPYRIGHT ©2021 BY WESTON & SAMPSON
THIS DRAWING HAS BEEN PREPARED FOR THE EXCLUSIVE USE OF THE CLIENT & PROJECT NAME LISTED ON THIS DRAWING ONLY.

REPRODUCTION, RELEASE OF UTILIZATION OF THE DRAWING CONTENT BY OTHER CLIENTS / FIRMS AND ON OTHER PROJECTS IS PROHIBITED BY LAW.

WESTON & SAMPSON RETAINS THE EXCLUSIVE USE OF THE INTELLECTIAL PROPERTY CONTAINED HEREIN.

Seal:

Issued For:

BID DOCUMENTS

Scale: As indicated

Key Plan:

Date:	MAY 21, 2021
Drawn By:	MMF
Reviewed By:	BPM
Approved By:	JRC
W&S Project No.:	2200740
W&S File No.:	246 - 98

Drawing Title:

GENERAL NOTES & PARTITION TYPES

Sheet Number:

A021

COPYRIGHT © 2021 WESTON & SAMPSON, INC.

6/1/2021 1:21:47 PM C:\Users\mcuskerb\OneDrive - WESTON & SAMPSON ENGINEERS, Inc\Documents\2200740_BlackstoneWTPDesign_Architecture_2020_mcuskerb.rvt

SIGNAGE SCHEDULE

FLOOR LEVEL	ROOM #	ROOM NAME	SIGN TYPE	QUANTITY
T.O. BASIN FLOOR	B100	PIPE GALLERY	B	1
T.O. FLOOR	100	FILTER ROOM	B	1
T.O. FLOOR	101	CONNECTOR	B	2
T.O. FLOOR	102	MECHANICAL ROOM	B	1
T.O. FLOOR	103	ELECTRICAL ROOM	A	1

ROOM FINISH SCHEDULE

FLOOR LEVEL	ROOM #	ROOM NAME	FLOOR MAT	FLOOR FINISH	FLOOR BASE	WALLS MAT	WALLS FINISH	CEILING TYPE	CEILING MAT	CEILING FINISH	CEILING HEIGHT	REMARKS
T.O. BASIN FLOOR	B100	PIPE GALLERY	CONC	SC	-	CONC	-	-	CONC	-	11'-0" +/-	PAINT STAIR STRINGERS, RAILINGS, GUARDS, ETC.
T.O. FLOOR	100	FILTER ROOM	CONC	SC	-	CONC/MTL PNL	PNT/-	-	FABRIC LINER	-	18'-8" - 24'-6" +/-	PAINT STAIR STRINGERS, RAILINGS, GUARDS, ETC.
T.O. FLOOR	101	CONNECTOR	CONC	SC	-	CONC / GYP BD	PNT / PNT	-	FABRIC LINER	-	8'-0" - 9'-0"	
T.O. FLOOR	102	MECHANICAL ROOM	CONC	SC	-	CONC/MTL PNL / GYP BD	PNT/-/PNT	-	FABRIC LINER	-	18'-8" - 24'-6" +/-	
T.O. FLOOR	103	ELECTRICAL ROOM	CONC	SC	-	CONC/MTL PNL / GYP BD	PNT/-/PNT	G2	GYP BD	PNT	10'-0"	

FLOOR PLAN GENERAL NOTES:

1. PROCESS SHOWN FOR REFERENCE ONLY. SEE PROCESS DRAWINGS FOR MORE INFO.
2. F.E. = FIRE EXTINGUISHER.
   ⟲ BRACKET MOUNTED
3. ALL INTERIOR DIMENSIONS ARE TAKEN FROM FACE OF GYPSUM WALL BOARD TO FACE OF GYPSUM WALL BOARD OR FACE OF CMU UNLESS SPECIFICALLY NOTED OTHERWISE.

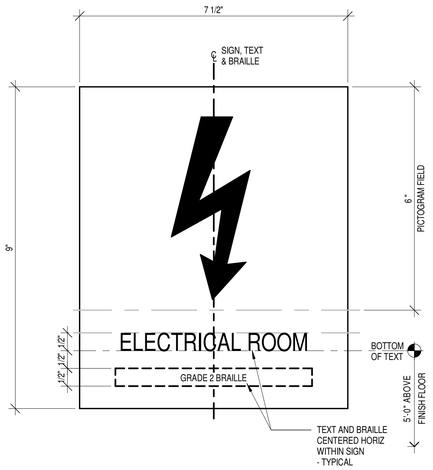

A SIGN TYPE A
6" = 1'-0"

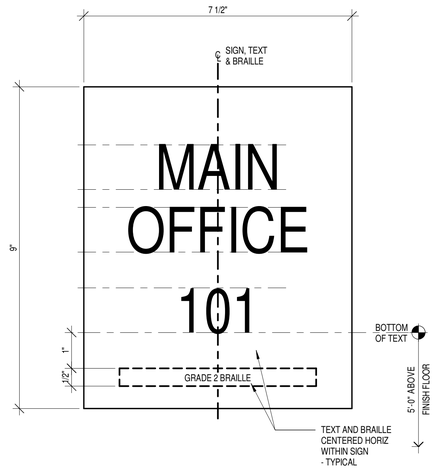

B SIGN TYPE B
6" = 1'-0"

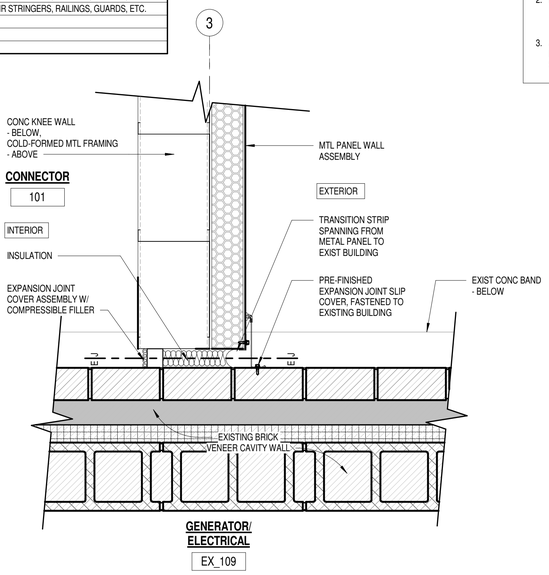

3 CONNECTOR EXPANSION JOINT DETAIL
1 1/2" = 1'-0" 1/ A101

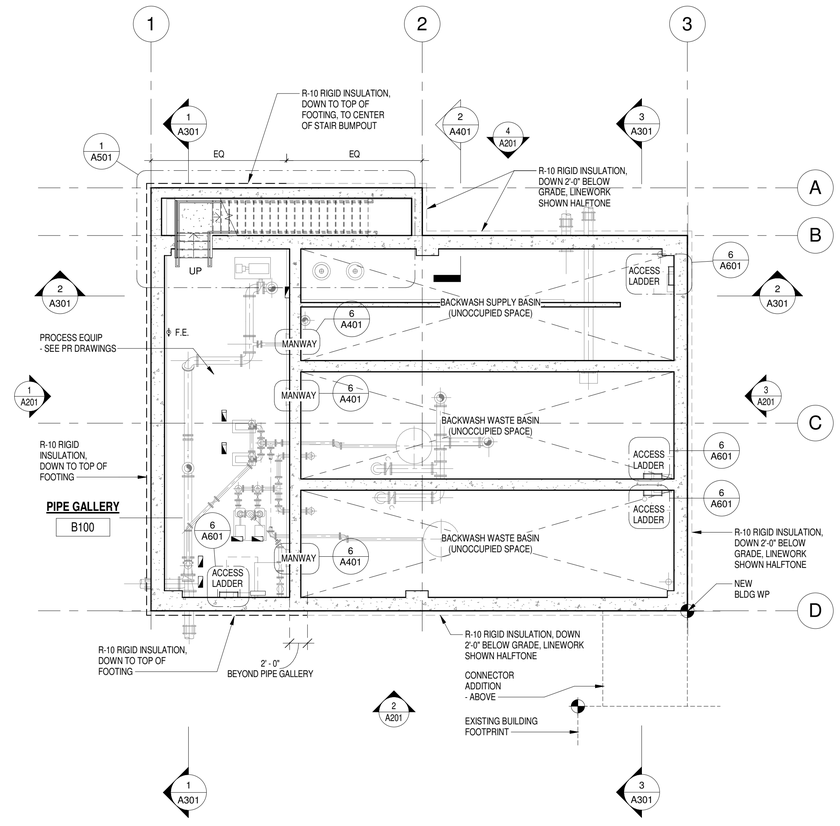

2 BASIN LEVEL FLOOR PLAN
1/8" = 1'-0" 1/ A201

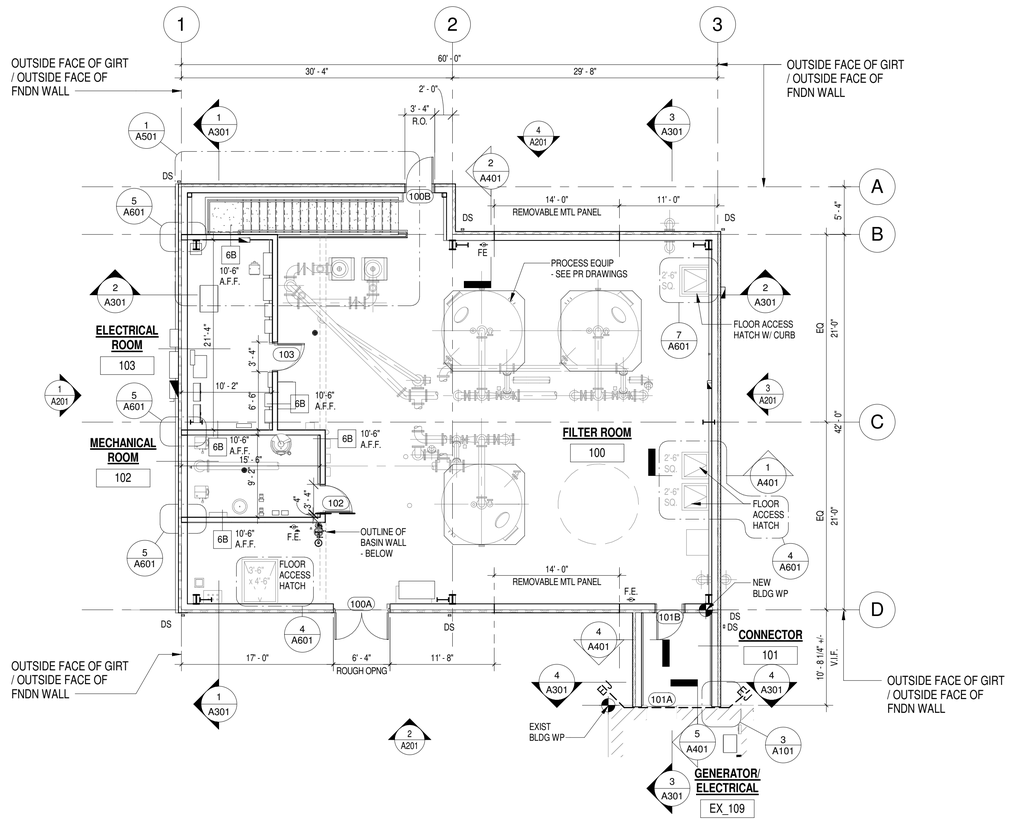

1 OVERALL FLOOR PLAN
1/8" = 1'-0" 1/ A201

Project:
TOWN OF BLACKSTONE, MASSACHUSETTS
DEPARTMENT OF PUBLIC WORKS
WATER TREATMENT PLANT
53 ELM STREET, BLACKSTONE, MASSACHUSETTS, 01504

Weston & Sampson
Weston & Sampson Engineers, Inc.
55 Walkers Brook Drive, Suite 100
Reading, MA 01867
978.532.1900 800.SAMPSON
www.westonandsampson.com

Consultants:

Revisions:

No.	Date	Description

COA:

"COPYRIGHT ©2021 BY WESTON & SAMPSON
THIS DRAWING HAS BEEN PREPARED FOR THE EXCLUSIVE USE OF THE CLIENT & PROJECT NAME LISTED ON THIS DRAWING ONLY.

REPRODUCTION, RELEASE OF UTILIZATION OF THE DRAWING CONTENT BY OTHER CLIENTS / FIRMS AND ON OTHER PROJECTS IS PROHIBITED BY LAW.

WESTON & SAMPSON RETAINS THE EXCLUSIVE USE OF THE INTELLECTUAL PROPERTY CONTAINED HEREIN.

Seal:
REGISTERED ARCHITECT — DANIEL G. TENNEY III — No. 6688 — CAMBRIDGE MA — COMMONWEALTH OF MASSACHUSETTS

Issued For:
BID DOCUMENTS

Scale: As indicated

Key Plan:

NORTH

Date:	MAY 21, 2021
Drawn By:	MMF
Reviewed By:	BPM
Approved By:	JRC
W&S Project No.:	2200740
W&S File No.:	246 - 97

Drawing Title:
OVERALL FLOOR PLANS

Sheet Number:
A101

COPYRIGHT © 2021 WESTON & SAMPSON, INC.

6/1/2021 1:21:51 PM C:\Users\mcuskerb\OneDrive - WESTON & SAMPSON ENGINEERS, Inc\Documents\2200740_Blackstone\WTPDesign_Architecture_2020_mcuskerb.rvt

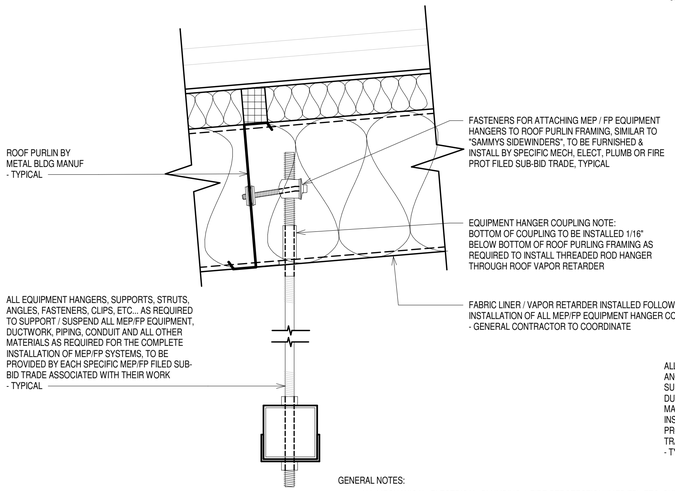

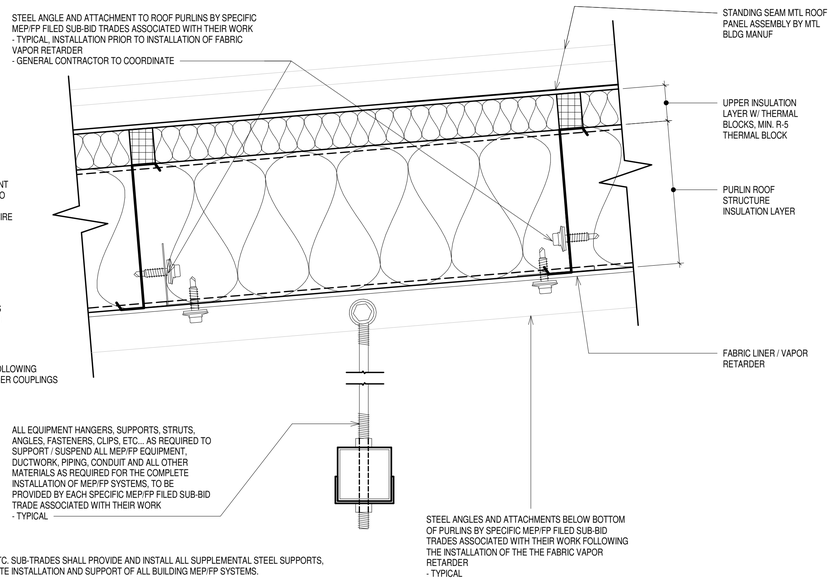

GENERAL NOTES:

1. ALL MECHANICAL, ELECTRICAL, PLUMBING & FIRE-PTROTECTION (MEP/FP), ETC. SUB-TRADES SHALL PROVIDE AND INSTALL ALL SUPPLEMENTAL STEEL SUPPORTS, ANGLES, STRUTS, CLIPS, ATTACHMENTS, ETC. AS NECESSARY FOR THE COMPLETE INSTALLATION AND SUPPORT OF ALL BUILDING MEP/FP SYSTEMS.

2. ALL MEP/FP SUB-TRADES SHALL SIZE ALL SUPPORTS, ANGLES, CONNECTORS, ETC, AS REQUIRED TO SUPPORT THE LOADS OF THE SUSPENDED SYSTEMS AND SHALL COORDINATE SIZES AND LOCATIONS, AND SHALL OBTAIN APPROVAL FROM THE METAL BUILDING MANUFACTURER.

3. ALL FASTENERS, COUPLINGS, ANGLES, ETC. ATTACHED TO THE BUILDING ROOF PURLIN FRAMING ABOVE THE BOTTOM OF THE PURLIN, TO BE INSTALLED PRIOR TO INSTALLATION OF THE CEILING FABRIC LINER. SUSPENDED SUPPORTS INSTALLED BELOW THE BOTTOM OF THE PURLIN FRAMING TO BE INSTALLED FOLLOWING INSTALLATION OF THE CEILING LINER. GENERAL CONTRACTOR SHALL COORDINATE THE SEQUENCE AND INSTALLATION OF THE WORK.

4. ALL EQUIPMENT LOADS/ REACTIONS IMPOSED ON THE METAL BUILDING FRAMING TO BE REVIEWED AND APPROVED BY THE METAL BUILDING MANUFACTURER. ALL SUPPLEMENTAL BUILDING FRAMING MEMBERS, AS REQUIRED TO SUPPORT MECHANICAL/ ELECTRICAL/ FIRE PROTECTION EQUIPMENT, AS DETERMINED BY THE PREFABRICATED METAL BUILDING DESIGN, IN CONSIDERATION OF ALL EQUIPOMENT-IMPOSED LOADS TO THE BUILDING, TO BE PROVIDED BY METAL BUILDING MANUFACTURER.

3 PURLIN ATTACHMENT DETAILS
3" = 1'-0"

REFLECTED CEILING PLAN LEGEND

CEILING TYPES:

TYPE G1: GYPSUM BOARD CEILING

TYPE G2: GYPSUM BOARD CEILING - MOISTURE RESISTANT

TYPE G3: 2-HR FIRE RATED CEILING UL DESIGN NO. U415

TYPE — A | X'-X" — HEIGHT — CEILING TAG

LIGHT FIXTURES

SURFACE MTD. LIGHT FIXTURE

C.U.H. — CABINET UNIT HEATER

U.H. — UNIT HEATER

EXIT SIGN

MOTION DETECTOR

SD — SMOKE DETECTOR

OS — OCCUPANCY SENSOR

PS — CEILING PHOTO SENSOR

F — FIRE ALARM SPEAKER / VISUAL SIGNAL

F — FIRE ALARM VISUAL SIGNAL

REFLECTED CEILING PLAN NOTES

1. REFER TO M.E.P DRAWINGS FOR LOCATION OF LIGHT FIXTURES, SUPPLIES, RETURNS AND ADDITIONAL CEILING INFORMATION.
2. COORDINATE QUANTITY OF LIGHT FIXTURES WITH ELECTRICAL DRAWINGS.
3. LIGHT FIXTURE SYMBOLS ON REFLECTED CEILING PLANS ARE DIAGRAMMATIC FOR REFERENCE ONLY. REFER TO ELECTRICAL DRAWINGS FOR TYPE OF LIGHT FIXTURES. ELECTRICAL CONTRACTOR IS RESPONSIBLE FOR QUANTITY OF LIGHT FIXTURES AS INDICATED ON THE ELECTRICAL DRAWINGS.
4. FOR CEILING HEIGHTS AND TYPES, REFER TO REFLECTED CEILING PLAN DRAWINGS.
5. NO SUSPENDED LOADS SHALL BE SUPPORTED BY THE ROOF DECK. THIS INCLUDES PIPING, DUCTWORK, MECHANICAL EQUIPMENT, STAGE RIGGING, CEILING, ETC. ALL STEEL FRAMING MEMBERS PREFERABLY UTILIZING A SYSTEM OF UNISTRUTS, BEAM CLAMPS, AND THREADED RODS. ALL ATTACHMENT DEVICES SHALL BE SUBMITTED FOR REVIEW AND ARE SUBJECT TO APPROVAL OF THE DESIGNER.
6. COORDINATE QUANTITY AND LOCATION FOR EXIT SIGNS WITH ELECTRICAL DRAWINGS.

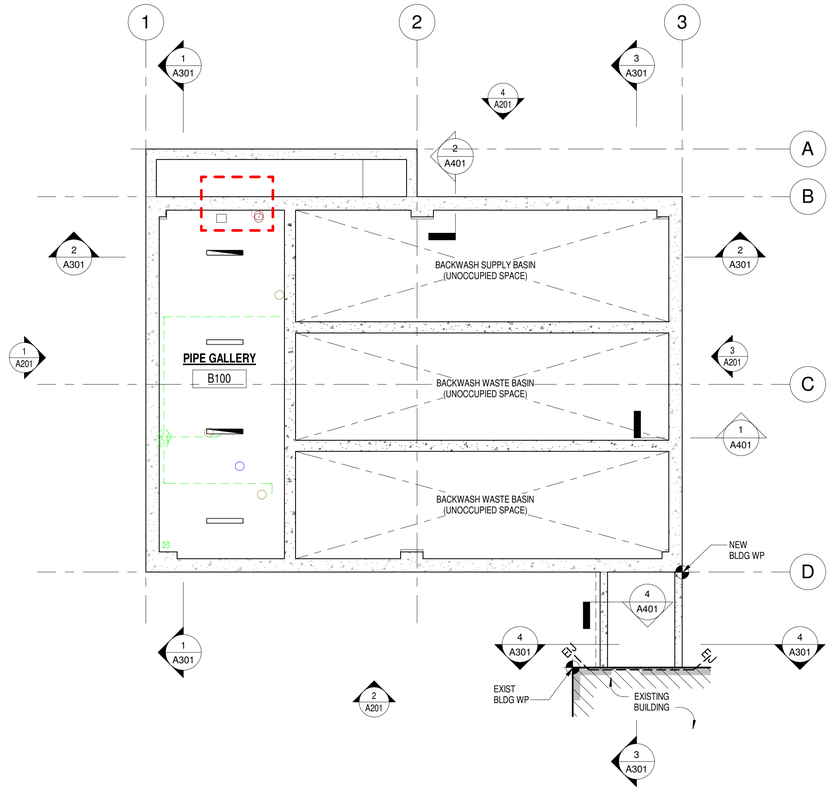

2 BASIN LEVEL REFLECTED CEILING PLAN
1/8" = 1'-0" 1/ A201

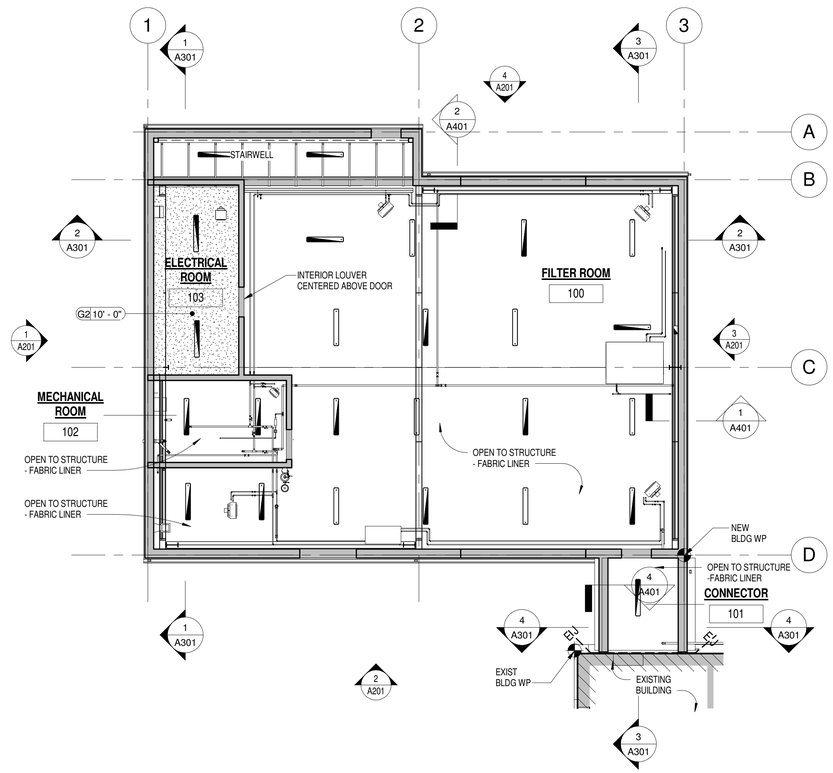

1 FIRST FLOOR REFLECTED CEILING PLAN
1/8" = 1'-0" 3/ A201

Project:
TOWN OF BLACKSTONE, MASSACHUSETTS
DEPARTMENT OF PUBLIC WORKS
WATER TREATMENT PLANT
53 ELM STREET, BLACKSTONE, MASSACHUSETTS, 01504

Weston & Sampson
Weston & Sampson Engineers, Inc.
55 Walkers Brook Drive, Suite 100
Reading, MA 01867
978.532.1900 800.SAMPSON
www.westonandsampson.com

Consultants:

Revisions:

No.	Date	Description

COA:

"COPYRIGHT ©2021 BY WESTON & SAMPSON
THIS DRAWING HAS BEEN PREPARED FOR THE EXCLUSIVE USE OF THE CLIENT & PROJECT NAME LISTED ON THIS DRAWING ONLY.

REPRODUCTION, RELEASE OF UTILIZATION OF THE DRAWING CONTENT BY OTHER CLIENTS / FIRMS AND ON OTHER PROJECTS IS PROHIBITED BY LAW.

WESTON & SAMPSON RETAINS THE EXCLUSIVE USE OF THE INTELLECTUAL PROPERTY CONTAINED HEREIN.

Seal:

REGISTERED ARCHITECT — DANIEL G. TENNEY III — No. 6688 — CAMBRIDGE MA — COMMONWEALTH OF MASSACHUSETTS

Issued For:

BID DOCUMENTS

Scale: As indicated

Key Plan:

NORTH

Date:	MAY 21, 2021
Drawn By:	MMF
Reviewed By:	BPM
Approved By:	JRC
W&S Project No.:	2200740
W&S File No.:	246 - 96

Drawing Title:

OVERALL REFLECTED CEILING PLANS

Sheet Number:

A102

COPYRIGHT © 2021 WESTON & SAMPSON, INC.

6/1/2021 1:21:55 PM C:\Users\mcauskerb\OneDrive - WESTON & SAMPSON ENGINEERS, Inc\Documents\2200740_BlackstoneWTPDesign_Architecture_2020_mcauskerb.rvt

GENERAL ROOF NOTES - METAL BUILDINGS

1. REFER TO EQUIPMENT, MECHANICAL, ELECTRICAL, AND PLUMBING DRAWINGS FOR ADDITIONAL ROOF PENETRATIONS AND EQUIPMENT NOT SHOWN. ANY DISCREPANCIES REGARDING LOCATION OF EQUIPMENT SHALL BE BROUGHT TO THE ATTENTION OF THE ARCHITECT FOR RESOLUTION IN FIELD.
2. SEE GENERAL NOTES ON A012
3. ALL GUTTERS TO PITCH TOWARDS DOWNSPOUTS AT A MINIMUM 1/16" PER FOOT AND SUPPORTED AS PER METAL BUILDING MANUFACTURER.
4. ROOF PENETRATIONS TO BE CUT AND FLASHED BY METAL BUILDING MANUFACTURER.
5. PROVIDE ROOF FLASHING AT ALL PENETRATIONS INCLUDING BUT NOT LIMITED TO VENT STACKS, FLUES, AND EXHAUST FANS. REVIEW PLUMBING, EQUIPMENT, MECHANICAL, AND ELECTRICAL DRAWINGS FOR CONSTRUCTION NOT INDICATED ON THIS DRAWING.
6. PROVIDE CRICKETS AT ALL ROOFTOP EQUIPMENT AND PENETRATIONS TO CREATE ADEQUATE ROOF DRAINAGE.
7. SUPPLEMENTAL FRAMING AND CURBS FOR ALL ROOFTOP EQUIPMENT SHALL BE PROVIDED AND INSTALLED BY THE METAL BUILDING MANUFACTURER.

STANDING SEAM METAL ROOF ASSEMBLY (BY MBM)

- STANDING SEAM METAL ROOF PANEL
- R-5 THERMAL BLOCKS AT PURLINS W/ UNFACED BATT INSULATION BETWEEN THERMAL BLOCKS (UPPER INSULATION LAYER)
- UNFACED BATT INSULATION LAYER BETWEEN PURLINS (STRUCTURE INSULATION LAYER)
- FABRIC AIR / VAPOR LINER
- MIN R-VALUE OF 38

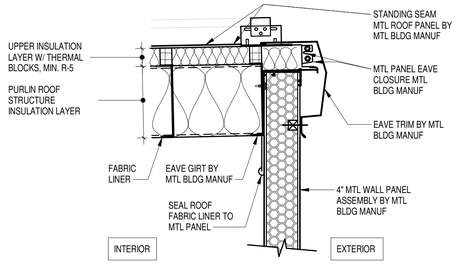

8 ROOF EAVE DETAIL
1 1/2" = 1'-0" 4/ A401

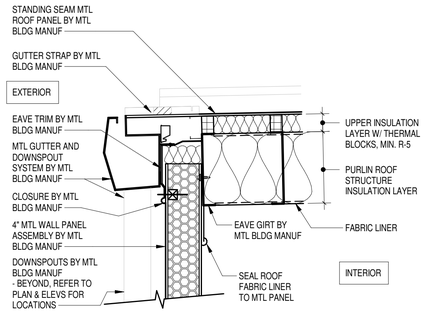

5 ROOF GUTTER DETAIL - NORTHERN CLIMATE STYLE
1 1/2" = 1'-0" 1/ A103

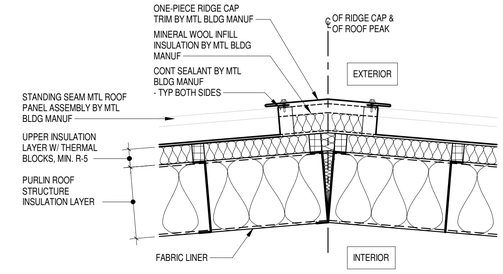

4 RIDGE CAP DETAIL
1 1/2" = 1'-0" 1/ A103

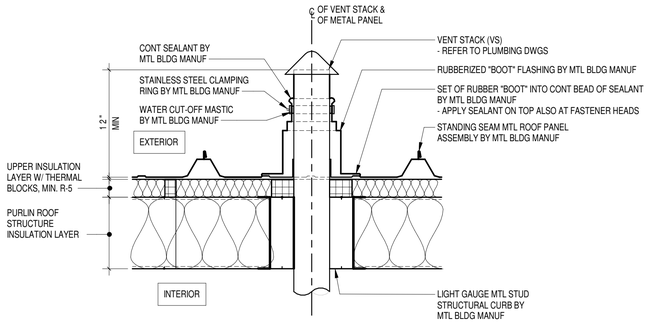

7 VENT STACK DETAIL
1 1/2" = 1'-0" 1/ A103

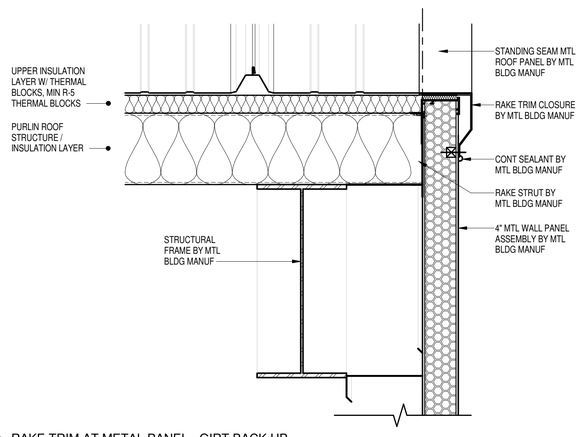

3 RAKE TRIM AT METAL PANEL - GIRT BACK UP
1 1/2" = 1'-0" 1/ A103

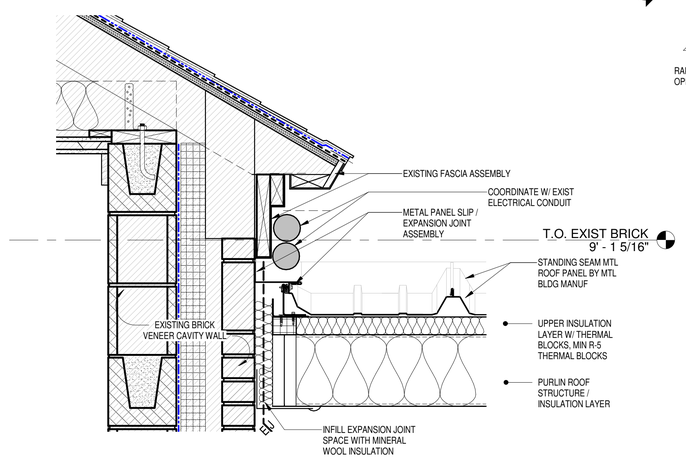

2 EXIST WALL TO CONNECTOR EXPANSION JOINT
1 1/2" = 1'-0" 5/ A401

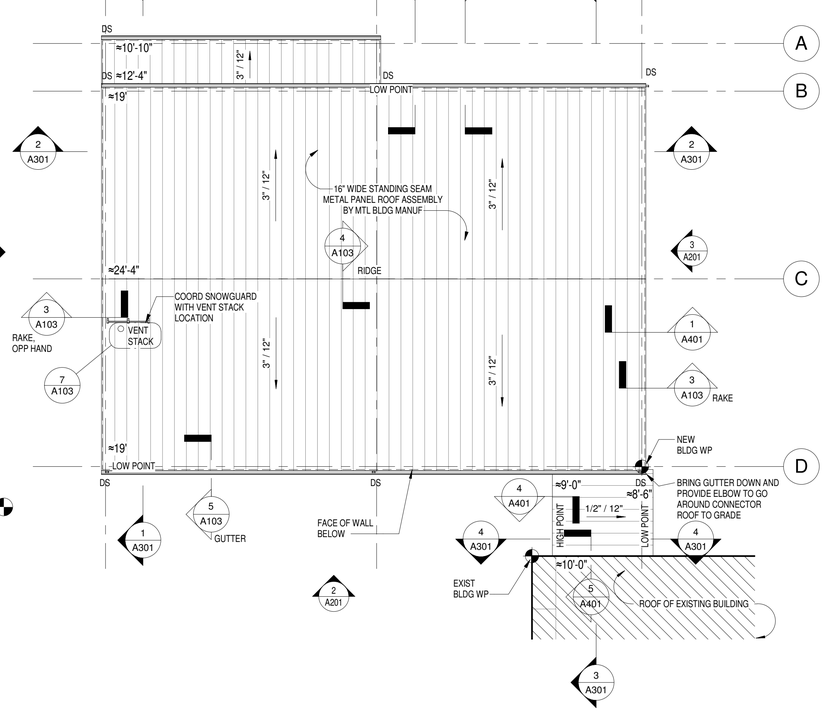

1 OVERALL ROOF PLAN
1/8" = 1'-0" 1/ A201

Project:

TOWN OF BLACKSTONE,
MASSACHUSETTS
DEPARTMENT OF PUBLIC WORKS

WATER TREATMENT PLANT

53 ELM STREET, BLACKSTONE,
MASSACHUSETTS, 01504

Weston & Sampson Engineers, Inc.
55 Walkers Brook Drive, Suite 100
Reading, MA 01867
978.532.1900 800.SAMPSON

www.westonandsampson.com

Consultants:

Revisions:

No.	Date	Description

COA:

"COPYRIGHT ©2021 BY WESTON & SAMPSON
THIS DRAWING HAS BEEN PREPARED FOR THE EXCLUSIVE USE OF THE CLIENT & PROJECT NAME LISTED ON THIS DRAWING ONLY.

REPRODUCTION, RELEASE OF UTILIZATION OF THE DRAWING CONTENT BY OTHER CLIENTS / FIRMS AND ON OTHER PROJECTS IS PROHIBITED BY LAW.

WESTON & SAMPSON RETAINS THE EXCLUSIVE USE OF THE INTELLECTUAL PROPERTY CONTAINED HEREIN.

Seal:

REGISTERED ARCHITECT — DANIEL G. TENNEY III — No. 6688 CAMBRIDGE MA — COMMONWEALTH OF MASSACHUSETTS

Issued For:

BID DOCUMENTS

Scale: As indicated

Key Plan:

NORTH

Date:	MAY 21, 2021
Drawn By:	MMF
Reviewed By:	BPM
Approved By:	JRC
W&S Project No.:	2200740
W&S File No.:	246 - 95

Drawing Title:

OVERALL ROOF PLAN & DETAILS

Sheet Number:

A103

COPYRIGHT © 2021 WESTON & SAMPSON, INC.

6/1/2021 1:21:59 PM C:\Users\mcusiketb\OneDrive - WESTON & SAMPSON ENGINEERS, Inc\Documents\2200740_BlackstoneWTPDesign_Architecture_2020_mcusiketb.rvt

EXTERIOR ELEVATION LEGEND:

EXTENTS OF WALL PANEL - WP-1, INSULATED WALL PANELS

CONCRETE FACED RIGID INSULATION PANELS

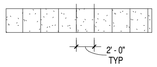

NOTES:
1. COORDINATE OPENINGS NOT SHOWN WITH EQUIPMENT AND MEP/PROCESS DRAWINGS.

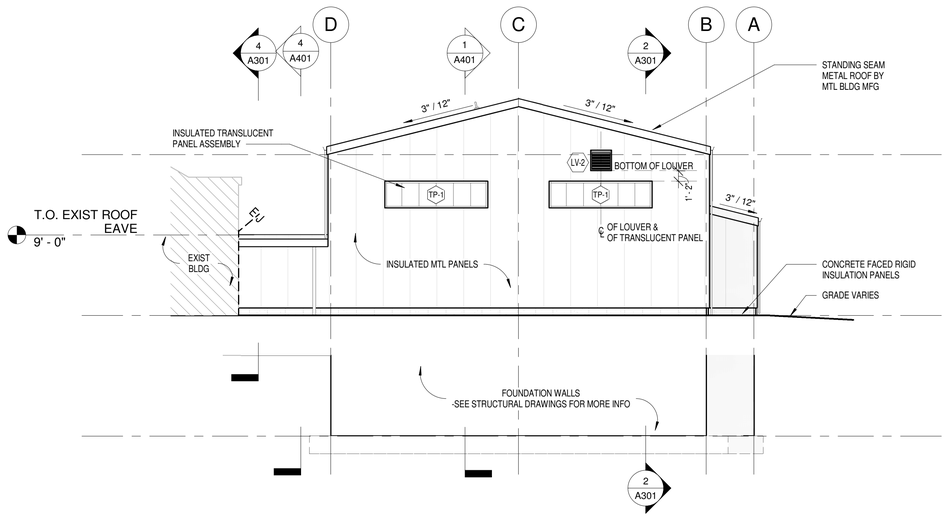

3 NORTH ELEVATION
1/8" = 1'-0" 1/ A101

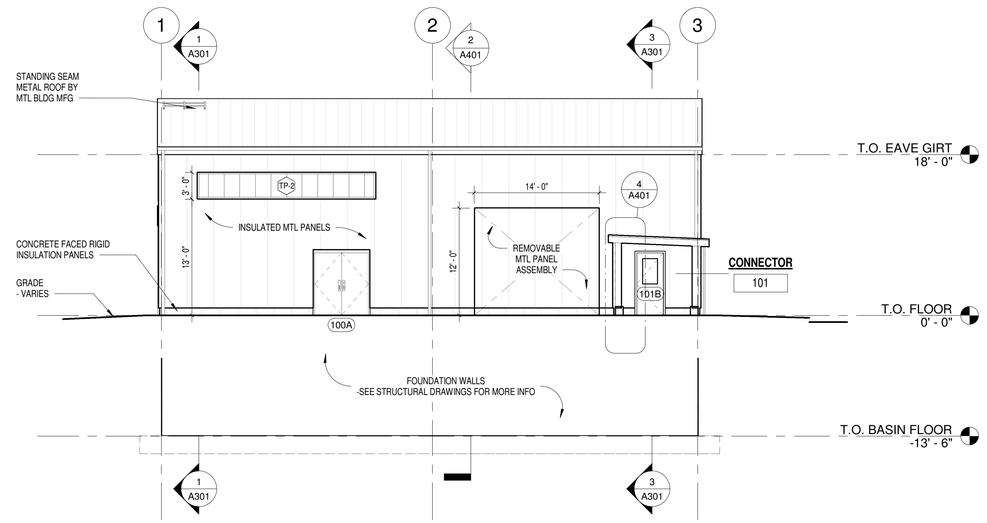

2 EAST ELEVATION
1/8" = 1'-0" 1/ A101

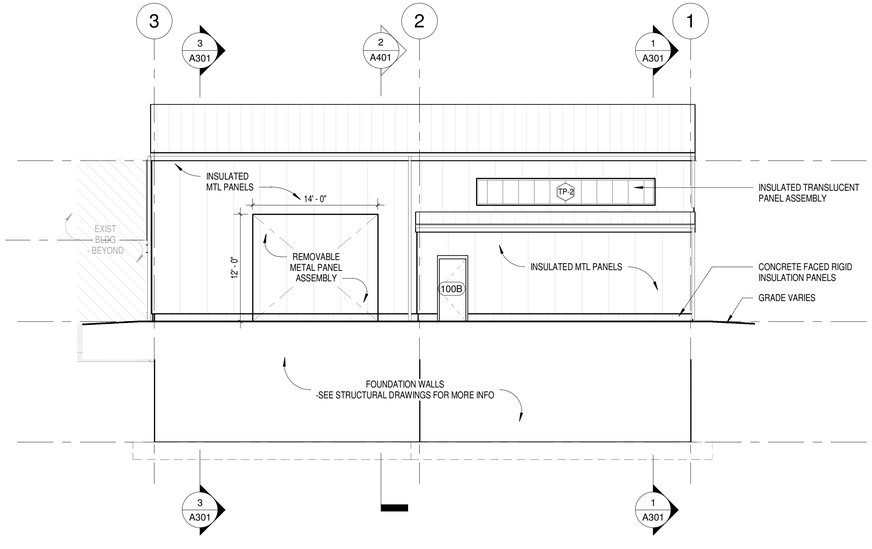

4 WEST ELEVATION
1/8" = 1'-0" 1/ A101

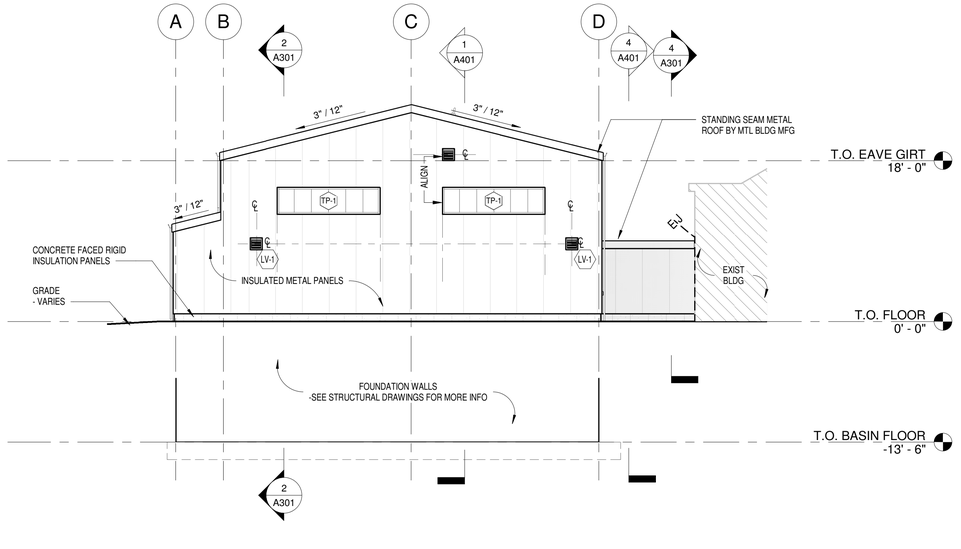

1 SOUTH ELEVATION
1/8" = 1'-0" 1/ A101

Project:

TOWN OF BLACKSTONE,
MASSACHUSETTS
DEPARTMENT OF PUBLIC WORKS

WATER TREATMENT PLANT

53 ELM STREET, BLACKSTONE,
MASSACHUSETTS, 01504

Weston & Sampson Engineers, Inc.
55 Walkers Brook Drive, Suite 100
Reading, MA 01867
978.532.1900 800.SAMPSON

www.westonandsampson.com

Consultants:

Revisions:

No.	Date	Description

COA:

"COPYRIGHT ©2021 BY WESTON & SAMPSON
THIS DRAWING HAS BEEN PREPARED FOR THE EXCLUSIVE USE OF THE CLIENT & PROJECT NAME LISTED ON THIS DRAWING ONLY.

REPRODUCTION, RELEASE OF UTILIZATION OF THE DRAWING CONTENT BY OTHER CLIENTS / FIRMS AND ON OTHER PROJECTS IS PROHIBITED BY LAW.

WESTON & SAMPSON RETAINS THE EXCLUSIVE USE OF THE INTELLECTUAL PROPERTY CONTAINED HEREIN.

Seal:

REGISTERED ARCHITECT
DANIEL G. TENNEY III
No. 6688
CAMBRIDGE
MA
COMMONWEALTH OF MASSACHUSETTS

Issued For:

BID DOCUMENTS

Scale: 1/8" = 1'-0"

Key Plan:

Date:	MAY 21, 2021
Drawn By:	MMF
Reviewed By:	BPM
Approved By:	JRC
W&S Project No.:	2200740
W&S File No.:	246 - 94

Drawing Title:

EXTERIOR ELEVATIONS

Sheet Number:

A201

COPYRIGHT © 2021 WESTON & SAMPSON, INC.

6/1/2021 1:22:15 PM C:\Users\mcusketb\OneDrive - WESTON & SAMPSON ENGINEERS, Inc\Documents\2200740_BlackstoneWTPDesign_Architecture_2020_mcusketb.rvt

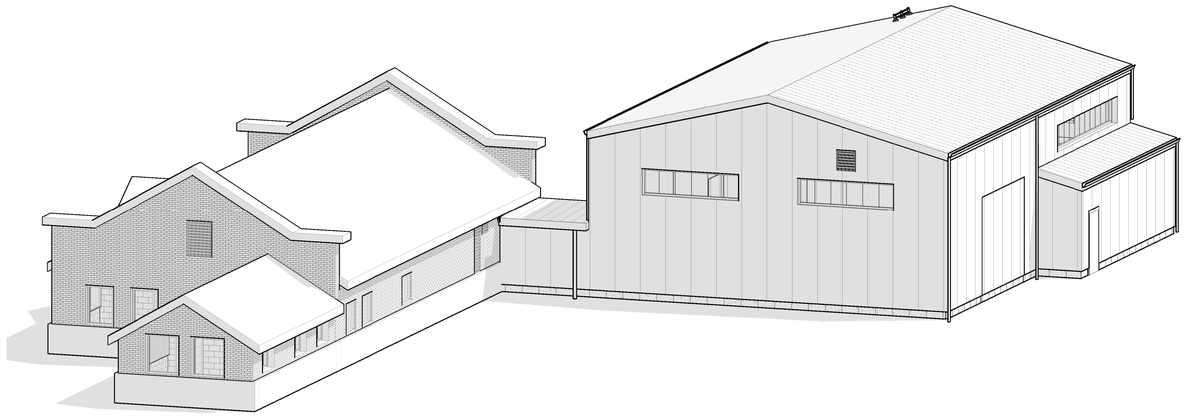

2 3D View 2

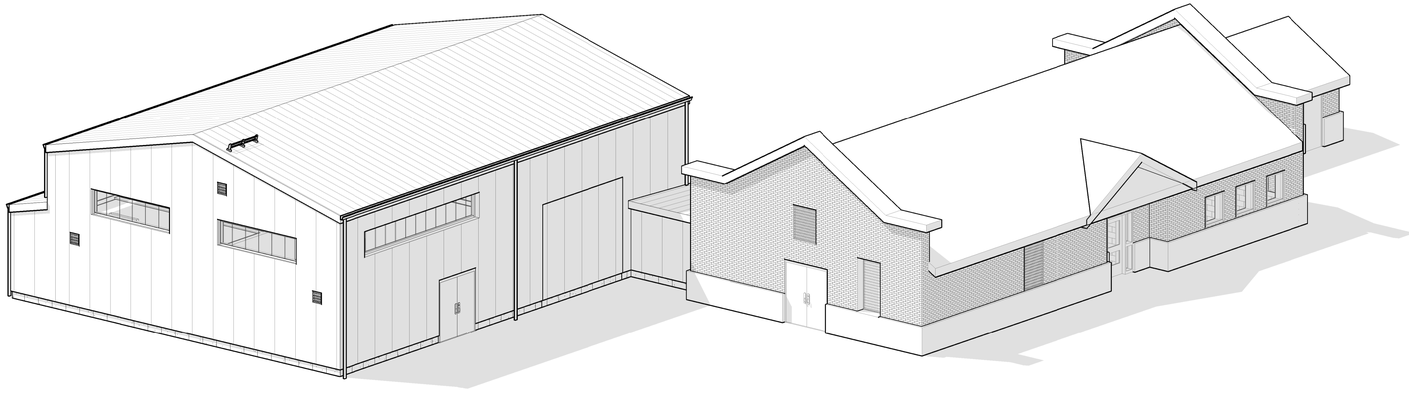

1 3D View 1

NOTE: 3D VIEWS ARE PROVIDED FOR REFERENCE ONLY. REFER TO PLANS, ELEVATIONS, SECTIONS, DETAILS AND SCHEDULES FOR BUILDING REQUIREMENTS.

Project:

TOWN OF BLACKSTONE,
MASSACHUSETTS
DEPARTMENT OF PUBLIC WORKS

WATER TREATMENT PLANT

53 ELM STREET, BLACKSTONE,
MASSACHUSETTS, 01504

Weston & Sampson Engineers, Inc.
55 Walkers Brook Drive, Suite 100
Reading, MA 01867
978.532.1900 800.SAMPSON

www.westonandsampson.com

Consultants:

Revisions:

No.	Date	Description

COA:

"COPYRIGHT ©2021 BY WESTON & SAMPSON
THIS DRAWING HAS BEEN PREPARED FOR THE EXCLUSIVE USE OF THE CLIENT & PROJECT NAME LISTED ON THIS DRAWING ONLY.

REPRODUCTION, RELEASE OF UTILIZATION OF THE DRAWING CONTENT BY OTHER CLIENTS / FIRMS AND ON OTHER PROJECTS IS PROHIBITED BY LAW.

WESTON & SAMPSON RETAINS THE EXCLUSIVE USE OF THE INTELLECTIAL PROPERTY CONTAINED HEREIN.

Seal:

REGISTERED ARCHITECT
DANIEL G. TENNEY III
No. 6688
CAMBRIDGE
MA
COMMONWEALTH OF MASSACHUSETTS

Issued For:

BID DOCUMENTS

Scale: 1/8" = 1'-0"

Key Plan:

Date:	MAY 21, 2021
Drawn By:	MMF
Reviewed By:	BPM
Approved By:	JRC
W&S Project No.:	2200740
W&S File No.:	246 - 93

Drawing Title:

3D VIEWS

Sheet Number:

A232

COPYRIGHT © 2021 WESTON & SAMPSON, INC.

6/1/2021 1:22:27 PM C:\Users\mcouskerb\OneDrive - WESTON & SAMPSON ENGINEERS, Inc\Documents\2200740_Blackstone\WTPDesign_Architecture_2020_mcouskerb.rvt

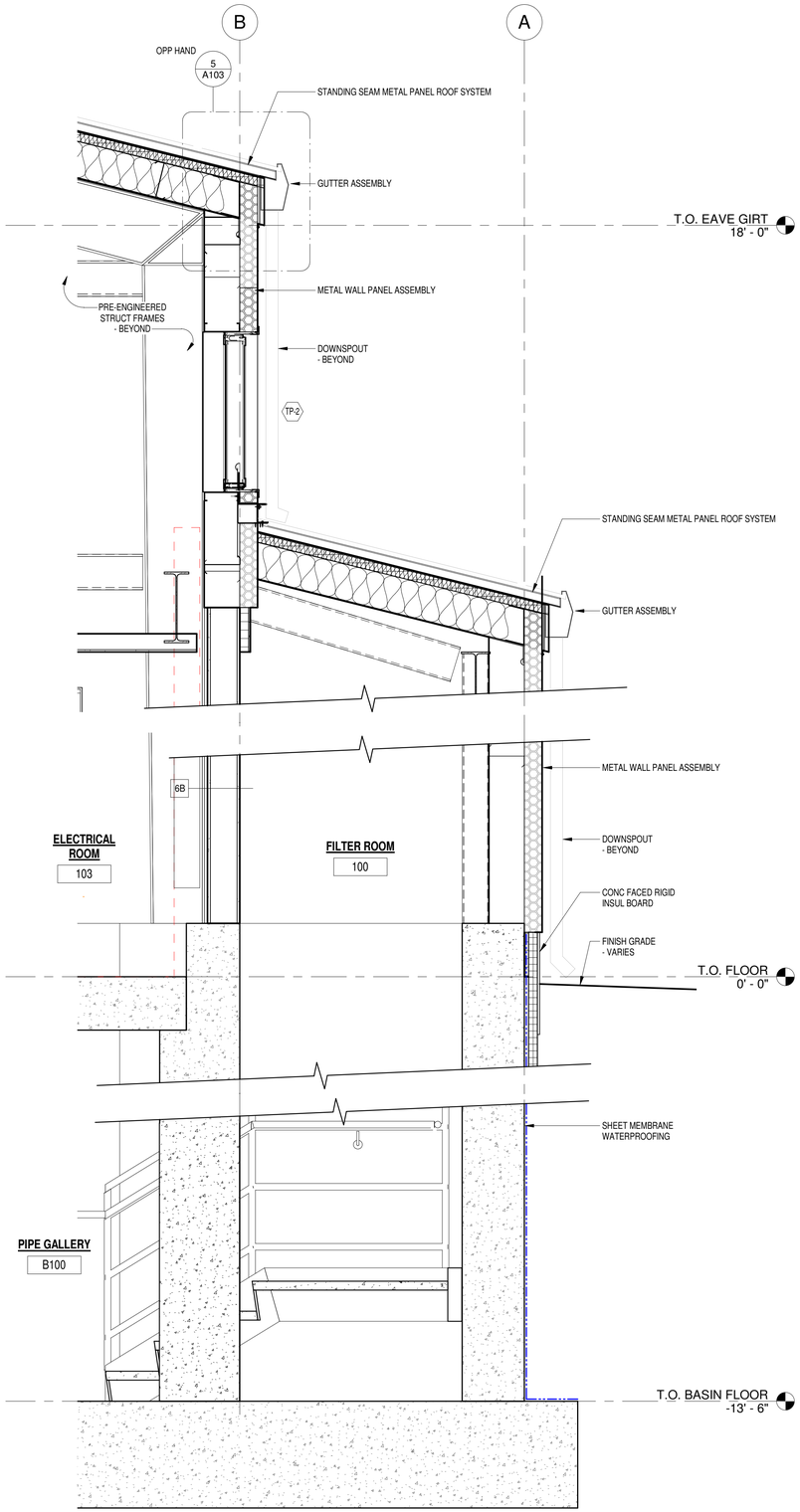

5 STAIRWELL WALL SECTION
3/4" = 1'-0" 1/ A301

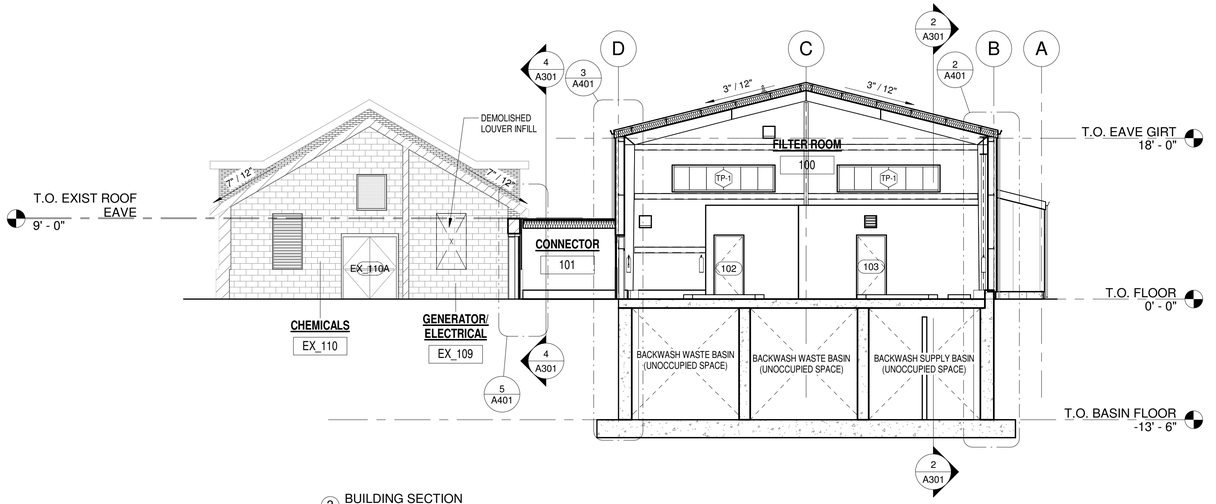

3 BUILDING SECTION
1/8" = 1'-0" 1/ A101

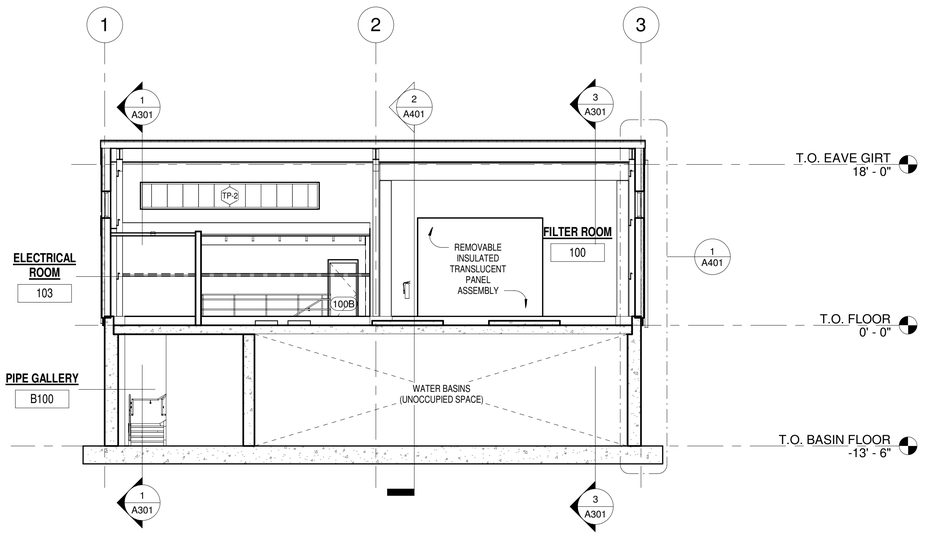

2 BUILDING SECTION
1/8" = 1'-0" 1/ A101

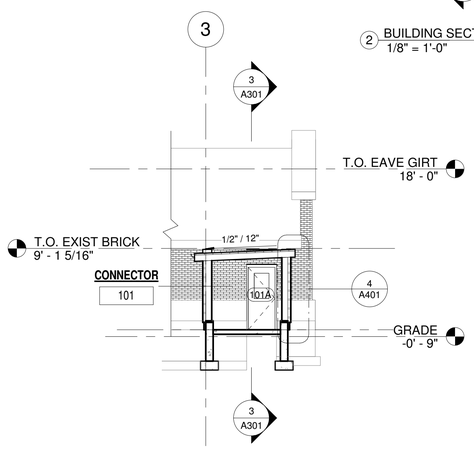

4 BUILDING SECTION
1/8" = 1'-0" 1/ A101

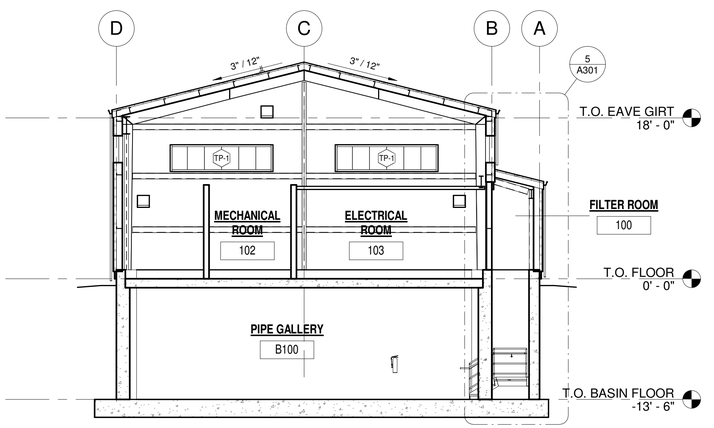

1 BUILDING SECTION
1/8" = 1'-0" 1/ A101

Project:

TOWN OF BLACKSTONE,
MASSACHUSETTS
DEPARTMENT OF PUBLIC WORKS

WATER TREATMENT PLANT

53 ELM STREET, BLACKSTONE,
MASSACHUSETTS, 01504

Weston & Sampson

Weston & Sampson Engineers, Inc.
55 Walkers Brook Drive, Suite 100
Reading, MA 01867
978.532.1900 800.SAMPSON

www.westonandsampson.com

Consultants:

Revisions:

No.	Date	Description

COA:

"COPYRIGHT ©2021 BY WESTON & SAMPSON
THIS DRAWING HAS BEEN PREPARED FOR THE EXCLUSIVE USE OF THE CLIENT & PROJECT NAME LISTED ON THIS DRAWING ONLY.

REPRODUCTION, RELEASE OF UTILIZATION OF THE DRAWING CONTENT BY OTHER CLIENTS / FIRMS AND ON OTHER PROJECTS IS PROHIBITED BY LAW.

WESTON & SAMPSON RETAINS THE EXCLUSIVE USE OF THE INTELLECTIAL PROPERTY CONTAINED HEREIN.

Seal:

REGISTERED ARCHITECT
DANIEL G. TENNEY III
No. 6698
CAMBRIDGE
MA
COMMONWEALTH OF MASSACHUSETTS

Issued For:

BID DOCUMENTS

Scale: As indicated

Key Plan:

Date:	MAY 21, 2021
Drawn By:	MMF
Reviewed By:	BPM
Approved By:	JRC
W&S Project No.:	2200740
W&S File No.:	246 - 92

Drawing Title:

BUILDING SECTIONS

Sheet Number:

A301

COPYRIGHT © 2021 WESTON & SAMPSON, INC.

C:\Users\mcuskerb\OneDrive - WESTON & SAMPSON ENGINEERS, Inc\Documents\2200740_BlackstoneWTPDesign_Architecture_2020_mcuskerb.rvt

6/1/2021 1:22:32 PM

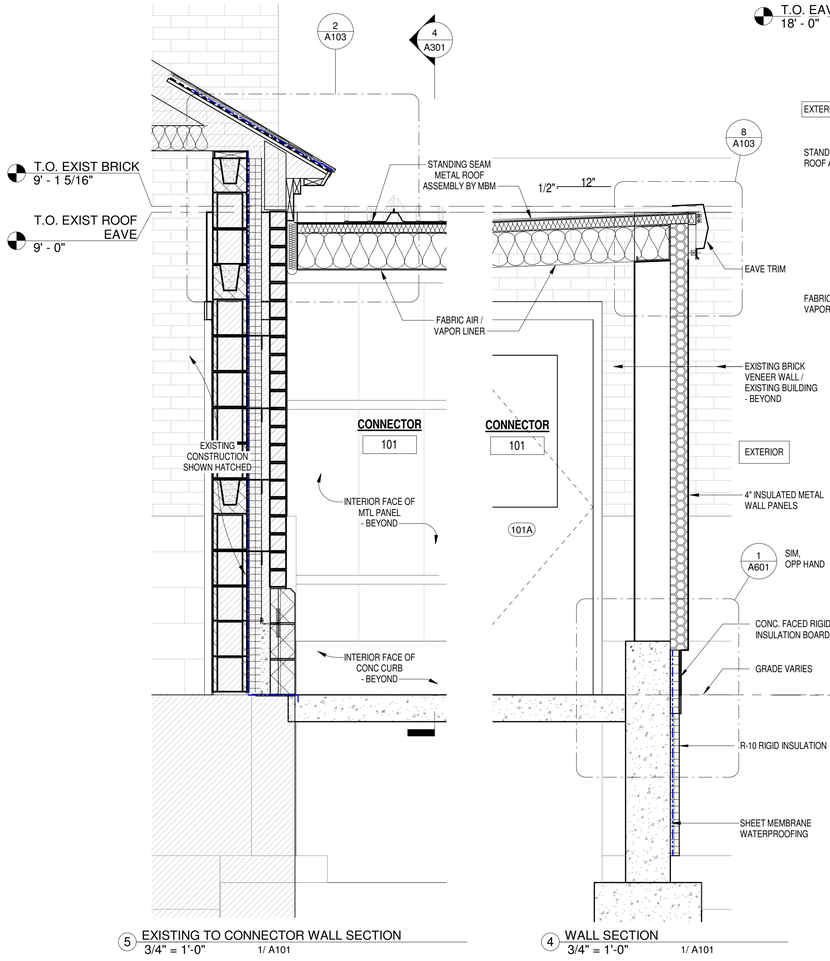

5 EXISTING TO CONNECTOR WALL SECTION
3/4" = 1'-0" 1/ A101

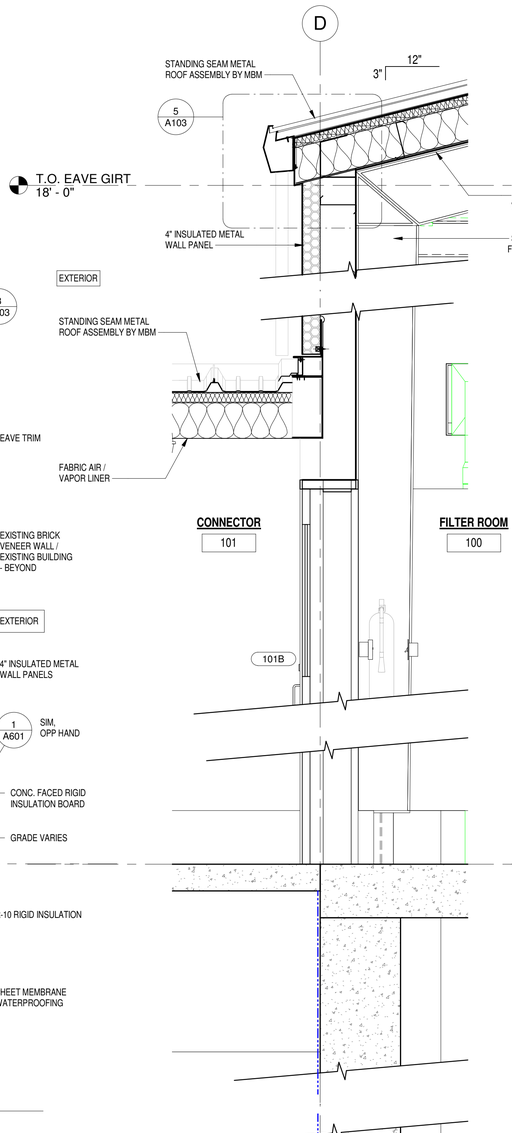

4 WALL SECTION
3/4" = 1'-0" 1/ A101

NOTES:
1. CENTER LINE OF MANWAY TO BE LOCATED 3-6" ABOVE PIPE GALLERY FLOOR.
2. SEE STRUCTURAL DWGS FOR CONCRETE REINFORCMENT DETAILS.

6 BASIN SIDE HATCH
3/4" = 1'-0" 2/ A101

3 WALL SECTION
3/4" = 1'-0" 3/ A301

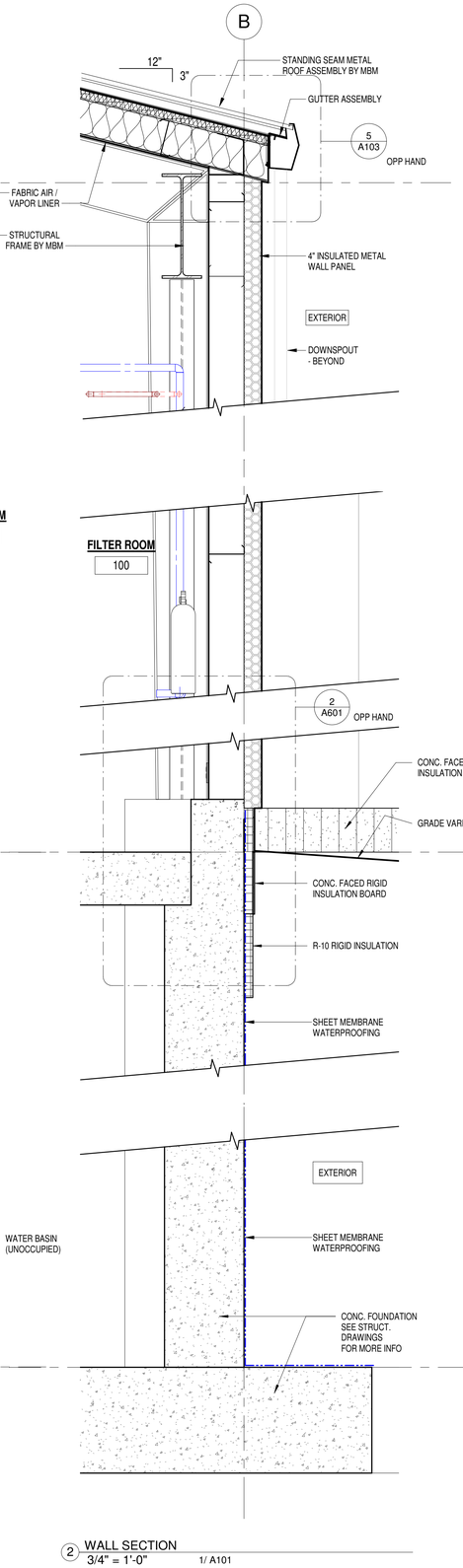

2 WALL SECTION
3/4" = 1'-0" 1/ A101

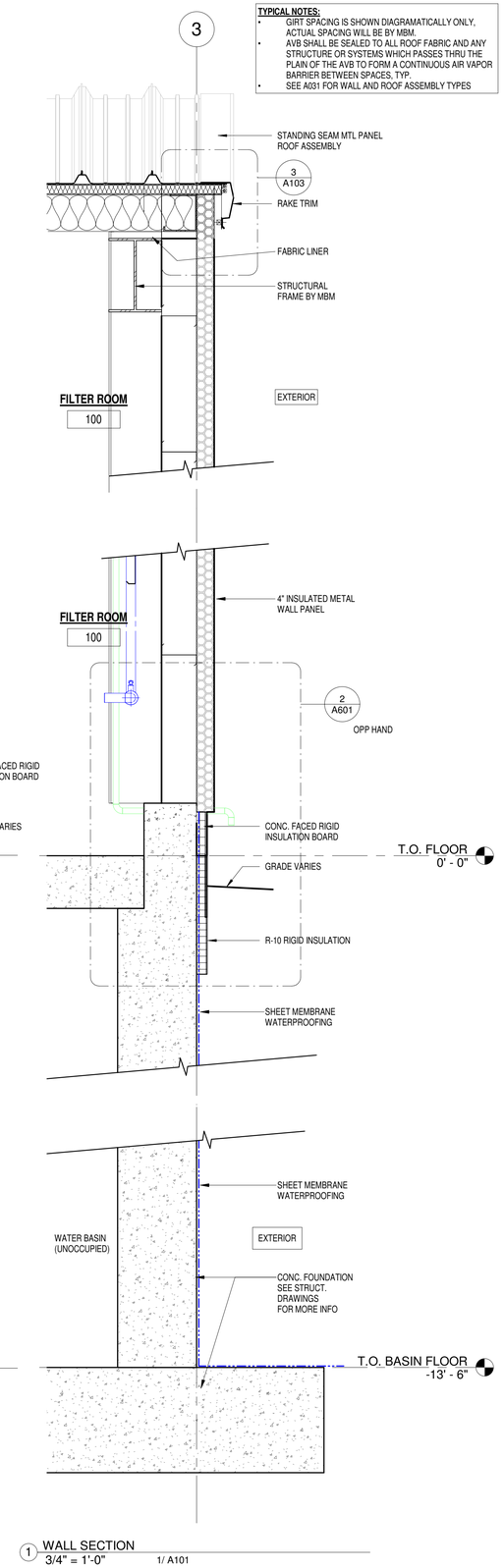

1 WALL SECTION
3/4" = 1'-0" 1/ A101

TYPICAL NOTES:
- GIRT SPACING IS SHOWN DIAGRAMATICALLY ONLY, ACTUAL SPACING WILL BE BY MBM.
- AVB SHALL BE SEALED TO ALL ROOF FABRIC AND ANY STRUCTURE OR SYSTEMS WHICH PASSES THRU THE PLAIN OF THE AVB TO FORM A CONTINUOUS AIR VAPOR BARRIER BETWEEN SPACES, TYP.
- SEE A031 FOR WALL AND ROOF ASSEMBLY TYPES

Project:
TOWN OF BLACKSTONE, MASSACHUSETTS
DEPARTMENT OF PUBLIC WORKS
WATER TREATMENT PLANT
53 ELM STREET, BLACKSTONE, MASSACHUSETTS, 01504

Weston & Sampson
Weston & Sampson Engineers, Inc.
55 Walkers Brook Drive, Suite 100
Reading, MA 01867
978.532.1900 800.SAMPSON
www.westonandsampson.com

Consultants:

Revisions:

No.	Date	Description

COA:

©COPYRIGHT ©2021 BY WESTON & SAMPSON
THIS DRAWING HAS BEEN PREPARED FOR THE EXCLUSIVE USE OF THE CLIENT & PROJECT NAME LISTED ON THIS DRAWING ONLY.
REPRODUCTION, RELEASE OF UTILIZATION OF THE DRAWING CONTENT BY OTHER CLIENTS / FIRMS AND ON OTHER PROJECTS IS PROHIBITED BY LAW.
WESTON & SAMPSON RETAINS THE EXCLUSIVE USE OF THE INTELLECTUAL PROPERTY CONTAINED HEREIN.

Seal:
REGISTERED ARCHITECT
DANIEL G. TENNEY III
No. 6688
CAMBRIDGE
MA
COMMONWEALTH OF MASSACHUSETTS

Issued For:
BID DOCUMENTS

Scale: As indicated

Key Plan:

Date:	MAY 21, 2021
Drawn By:	MMF
Reviewed By:	BPM
Approved By:	JRC
W&S Project No.:	2200740
W&S File No.:	246 - 91

Drawing Title:
WALL SECTIONS

Sheet Number:
A401

COPYRIGHT © 2021 WESTON & SAMPSON, INC.

6/1/2021 1:22:36 PM C:\Users\mcusikeb\OneDrive - WESTON & SAMPSON ENGINEERS, Inc\Documents\2200740_BlackstoneWTPDesign_Architecture_2020_mcusikeb.rvt

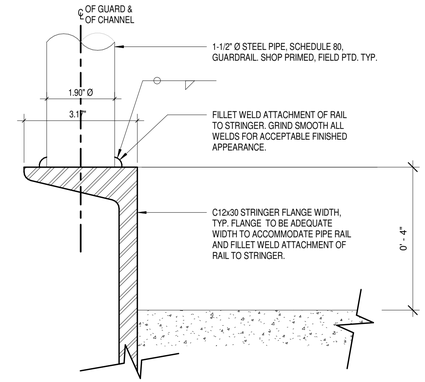

7 STAIR RAIL STRINGER DETAIL
6" = 1'-0"

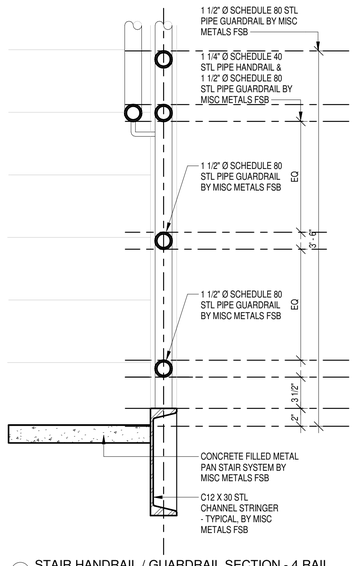

6 STAIR HANDRAIL / GUARDRAIL SECTION - 4 RAIL
1 1/2" = 1'-0" 1/ A501

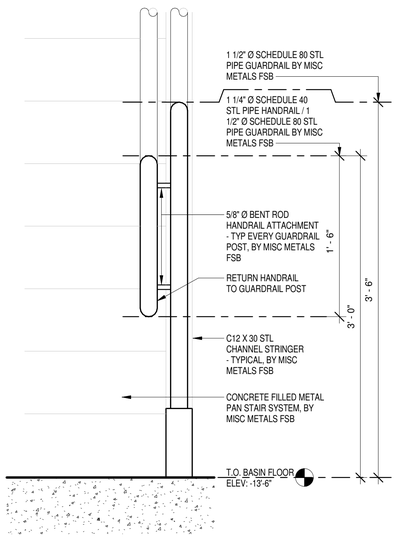

5 STAIR HANDRAIL / GUARDRAIL ELEVATION - END CONDITION
1 1/2" = 1'-0" 3/ A501

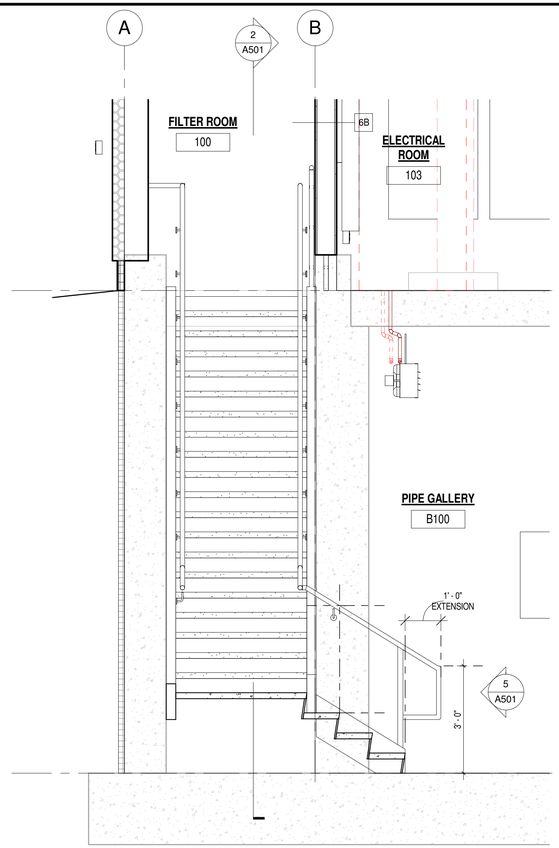

3 STAIR SECTION 2
1/2" = 1'-0" 1/ A501

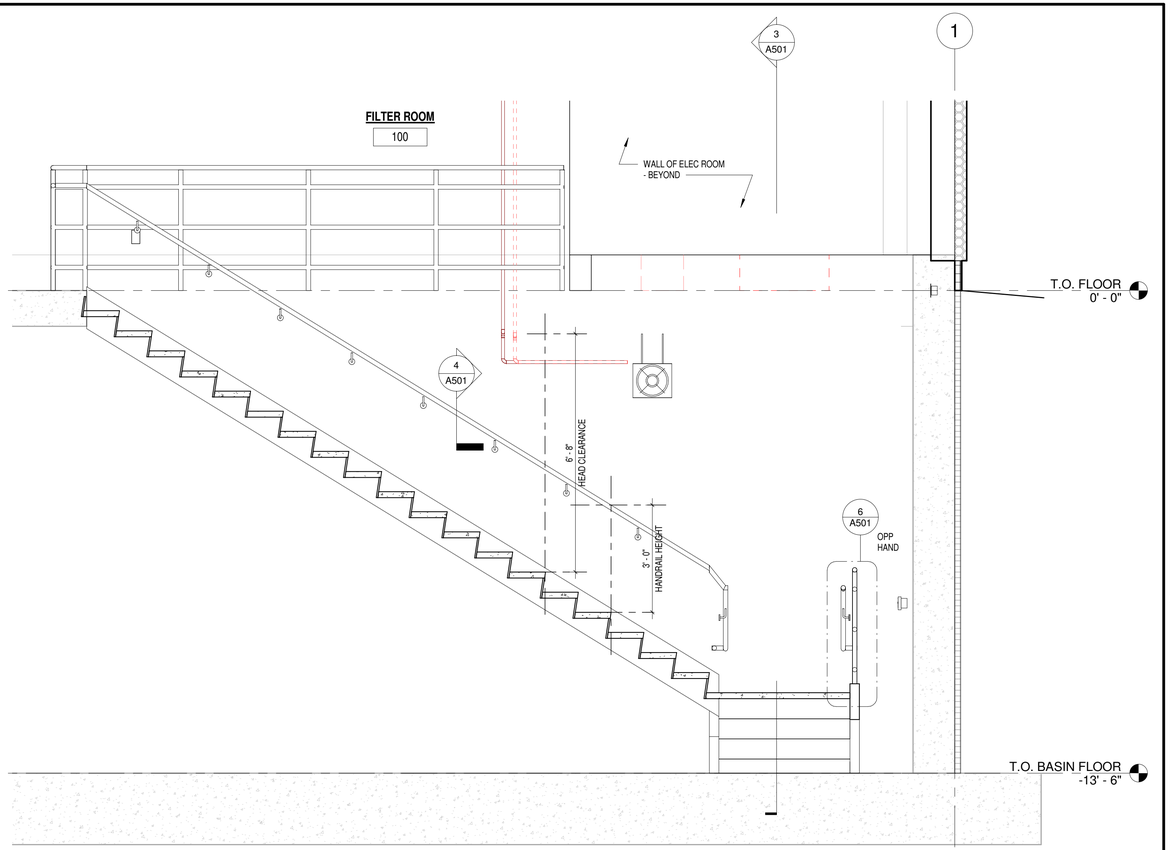

2 STAIR SECTION 1
1/2" = 1'-0" 1/ A501

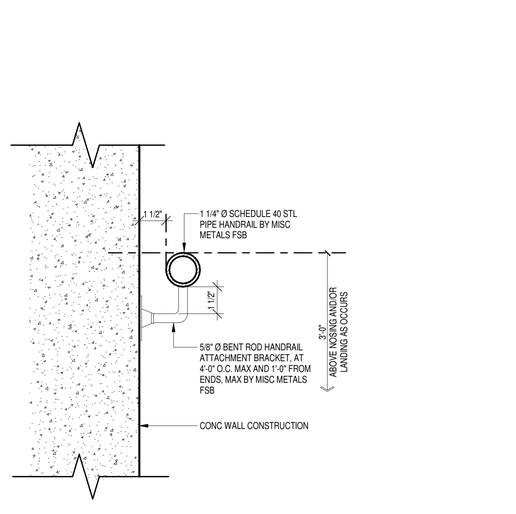

4 HANDRAIL DETAIL
3" = 1'-0" 2/ A501

NOTES:

1. REFER TO ENLARGED STAIR PLANS SERIES FOR HANDRAIL LOCATIONS (TYP.)
2. RETURN ALL MTD HANDRAILS BACK TO WALL W/ RADIUS TRANSITIONS. ALL JOINTS MUST BE SMOOTH. (CAP ALL OPEN PIPE ENDS & LEAVE 1/8" CLEAR BETWEEN FINISH WALL AND HANDRAIL RETURN ENDS)

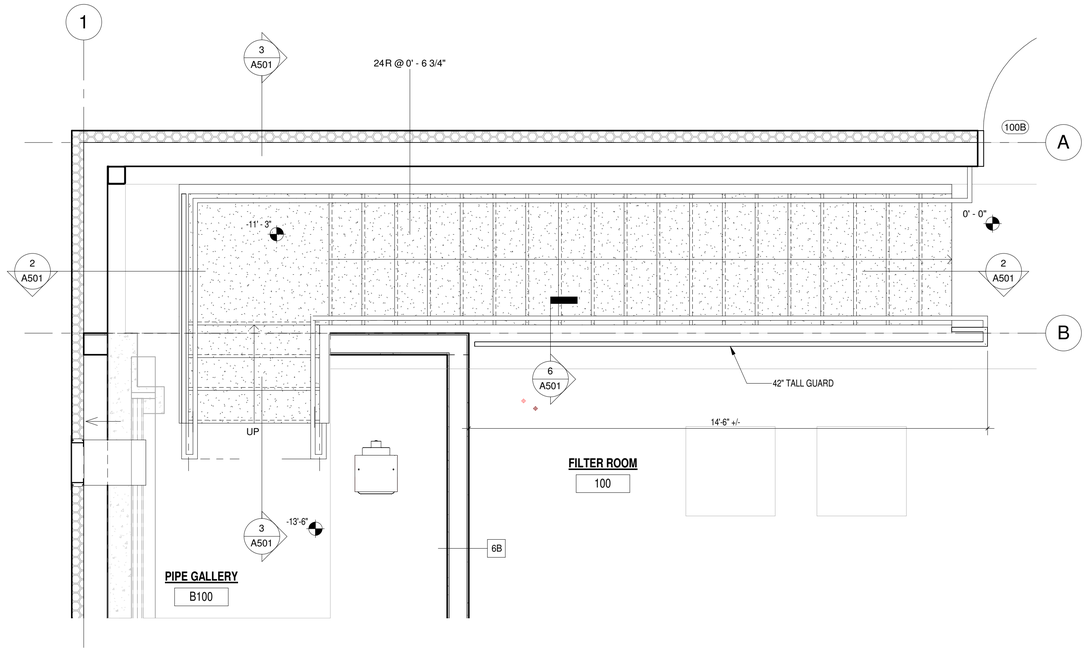

1 ENLARGED STAIR PLAN
1/2" = 1'-0" 1/ A101

Project:

TOWN OF BLACKSTONE,
MASSACHUSETTS
DEPARTMENT OF PUBLIC WORKS

WATER TREATMENT PLANT

53 ELM STREET, BLACKSTONE,
MASSACHUSETTS, 01504

Weston & Sampson

Weston & Sampson Engineers, Inc.
55 Walkers Brook Drive, Suite 100
Reading, MA 01867
978.532.1900 800.SAMPSON

www.westonandsampson.com

Consultants:

Revisions:

No.	Date	Description

COA:

"COPYRIGHT ©2021 BY WESTON & SAMPSON
THIS DRAWING HAS BEEN PREPARED FOR THE EXCLUSIVE USE OF THE CLIENT & PROJECT NAME LISTED ON THIS DRAWING ONLY.

REPRODUCTION, RELEASE OF UTILIZATION OF THE DRAWING CONTENT BY OTHER CLIENTS / FIRMS AND ON OTHER PROJECTS IS PROHIBITED BY LAW.

WESTON & SAMPSON RETAINS THE EXCLUSIVE USE OF THE INTELLECTUAL PROPERTY CONTAINED HEREIN.

Seal:

REGISTERED ARCHITECT
DANIEL G. TENNEY III
No. 6688
CAMBRIDGE
MA
COMMONWEALTH OF MASSACHUSETTS

Issued For:

BID DOCUMENTS

Scale: As indicated

Key Plan:

NORTH

Date:	MAY 21, 2021
Drawn By:	MMF
Reviewed By:	BPM
Approved By:	JRC
W&S Project No.:	2200740
W&S File No.:	246 - 90

Drawing Title:

LARGE SCALE STAIR PLANS / SECTIONS

Sheet Number:

A501

COPYRIGHT © 2021 WESTON & SAMPSON, INC.

6/1/2021 1:22:39 PM C:\Users\mcuskerb\OneDrive - WESTON & SAMPSON ENGINEERS, Inc\Documents\2200740_Blackstone\WTPDesign_Architecture_2020_mcuskerb.rvt

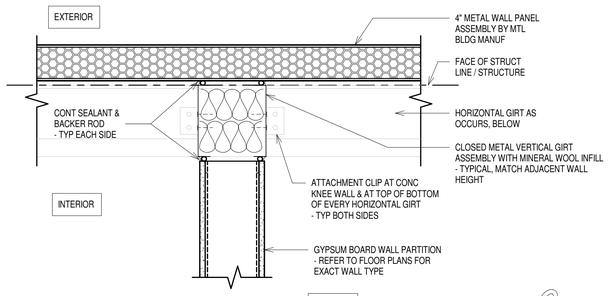

5 WALL INFILL AT GIRTS DETAILS
1 1/2" = 1'-0" 1/ A101

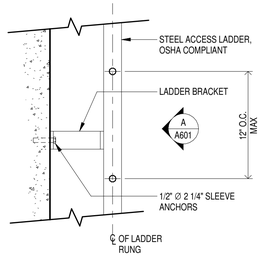

B BRACKET DETAIL

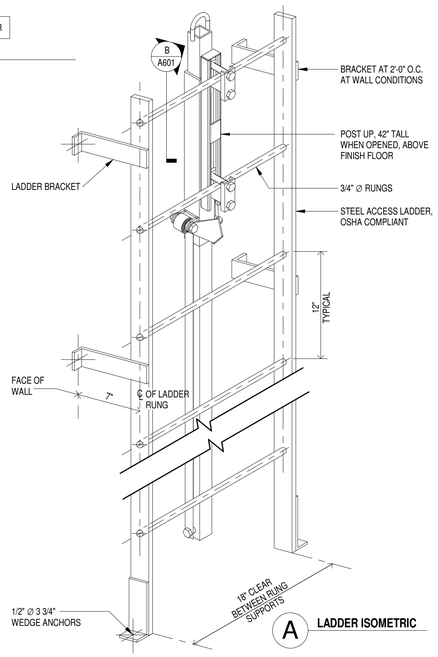

A LADDER ISOMETRIC

6 VERTICAL ACCESS LADDER (TYP OF 4)
1 1/2" = 1'-0" 2/ A101

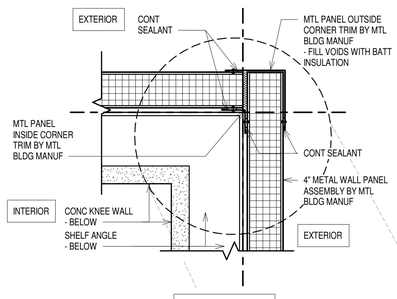

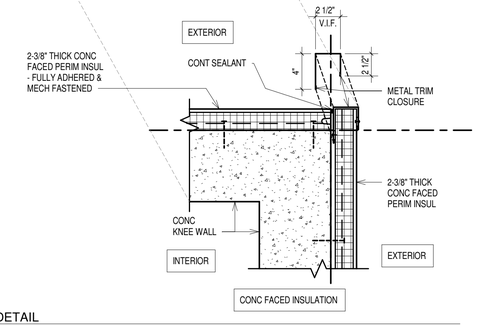

3 TYPICAL CORNER DETAIL
1 1/2" = 1'-0"

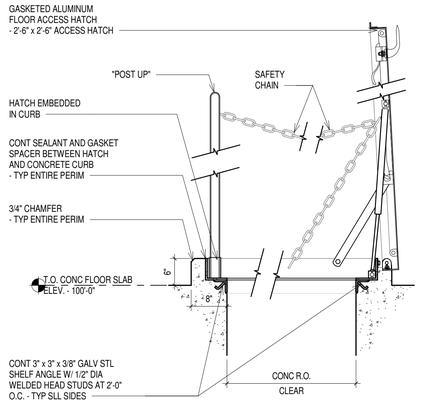

7 ACCESS HATCH - CURB
3/4" = 1'-0" 1/ A101

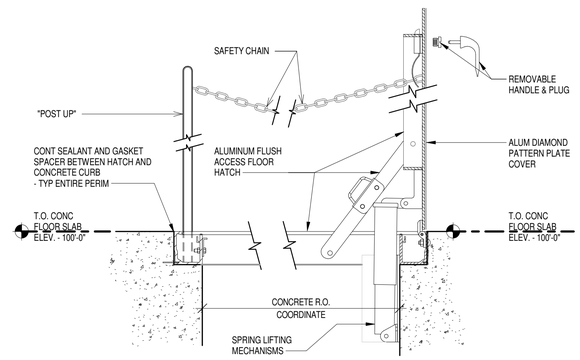

4 ACCESS HATCH - FLUSH
3/4" = 1'-0" 1/ A101

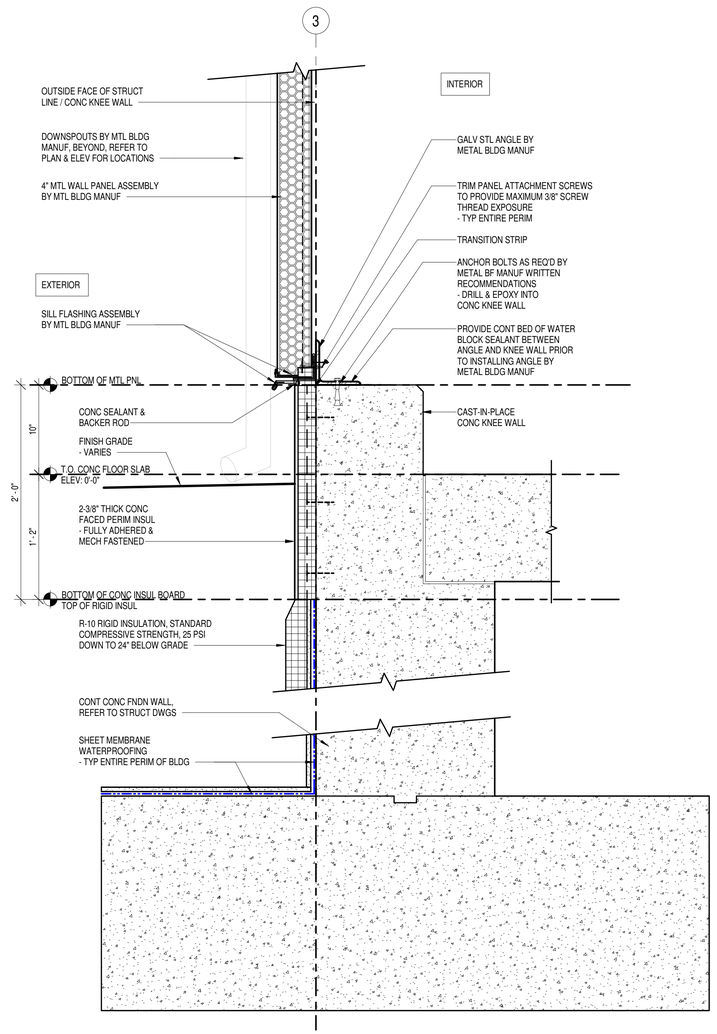

2 MTL PANEL TO CONC FACED BD INSUL DETAIL AT BASINS
1 1/2" = 1'-0" 1/ A401

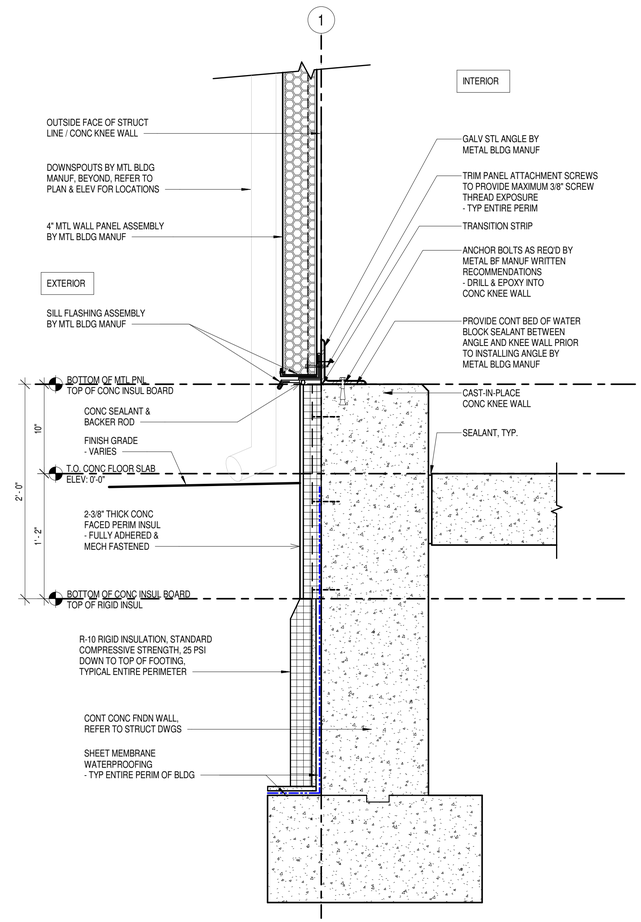

1 MTL PANEL TO CONC FACED BD INSUL DETAIL
1 1/2" = 1'-0" 4/ A401

Project:

TOWN OF BLACKSTONE, MASSACHUSETTS
DEPARTMENT OF PUBLIC WORKS

WATER TREATMENT PLANT

53 ELM STREET, BLACKSTONE, MASSACHUSETTS, 01504

Weston & Sampson

Weston & Sampson Engineers, Inc.
55 Walkers Brook Drive, Suite 100
Reading, MA 01867
978.532.1900 800.SAMPSON

www.westonandsampson.com

Consultants:

Revisions:

No.	Date	Description

COA:

"COPYRIGHT ©2021 BY WESTON & SAMPSON
THIS DRAWING HAS BEEN PREPARED FOR THE EXCLUSIVE USE OF THE CLIENT & PROJECT NAME LISTED ON THIS DRAWING ONLY.

REPRODUCTION, RELEASE OF UTILIZATION OF THE DRAWING CONTENT BY OTHER CLIENTS / FIRMS AND ON OTHER PROJECTS IS PROHIBITED BY LAW.

WESTON & SAMPSON RETAINS THE EXCLUSIVE USE OF THE INTELLECTUAL PROPERTY CONTAINED HEREIN.

Seal:

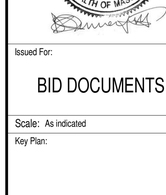

Issued For:

BID DOCUMENTS

Scale: As indicated

Key Plan:

Date:	MAY 21, 2021
Drawn By:	MMF
Reviewed By:	BPM
Approved By:	JRC
W&S Project No.:	2200740
W&S File No.:	246 - 89

Drawing Title:

DETAILS

Sheet Number:

A601

COPYRIGHT © 2021 WESTON & SAMPSON, INC.

6/1/2021 1:22:41 PM C:\Users\mcusiketb\OneDrive - WESTON & SAMPSON ENGINEERS, Inc\Documents\2200740_BlackstoneWTPDesign_Architecture_2020_mcusiketb.rvt

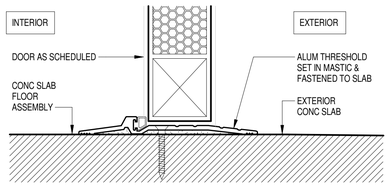

8 EXTERIOR DOOR SILL DETAIL
6" = 1'-0"

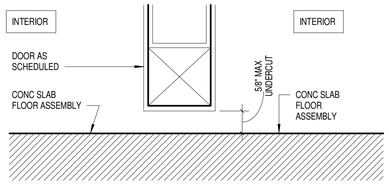

6 TYPICAL INTERIOR DOOR SILL
6" = 1'-0"

NON-STOREFRONT GLAZING SCHEDULE

TYPE	DESCRIPTION	USE IN THESE LOCATIONS
1	1/4" CLEAR TEMPERED	ALL INTERIOR NON-FIRE RATED DOORS AND INTERIOR WINDOWS
2	1/4" CLEAR LAMINATED GLASS	AS INDICATED
3	5/16" - 3/8" CERAMIC FIRE RATED GLASS	ALL INTERIOR FIRE RATED DOORS & WINDOWS
4	1" CLEAR INSULATING TEMPERED GLASS	ALL EXTERIOR DOORS, CURTAIN WALL, STOREFRONT, & WINDOWS
5	1/4" TEMPERED FROSTED GLASS	AS INDICATED

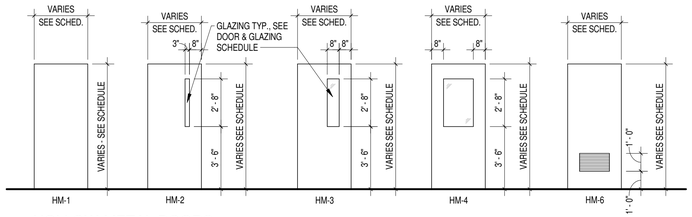

HOLLOW METAL DOORS

SCALE: 1/4" = 1'-0"

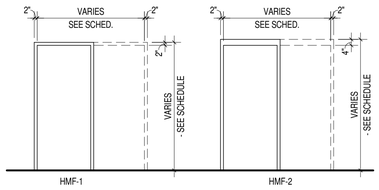

HOLLOW METAL FRAMES

SCALE: 1/4" = 1'-0"

DOOR SCHEDULE

DOOR #	DOOR WIDTH	DOOR HEIGHT	DOOR TYPE	DOOR MATERIAL	FRAMES TYPE	FRAMES MATERIAL	DETAILS HEAD	DETAILS JAMB	DETAILS SILL	GLAZING TYPE	HDWR SET	DOOR CONTACT	REMARKS
100A	6' - 0"	7' - 0"	HM-1	PNT	HMF-1	HM	2 / A801	1 / A801	8 / A801	-	02	•	
101A	3' - 0"	7' - 0"	HM-4	PNT	HMF-2	HM	6 / AD101	7 / AD101	6 / A801	4	04		
100B	3' - 0"	7' - 0"	HM-1	PNT	HMF-1	HM	2 / A801	1 / A801	8 / A801	-	01	•	
102	3' - 0"	7' - 0"	HM-1	PNT	HMF-1	HM	5 / A801	4 / A801	6 / A801	-	05		
103	3' - 0"	7' - 0"	HM-1	PNT	HMF-1	HM	5 / A801	4 / A801	6 / A801	-	03		
101B	3' - 0"	7' - 0"	HM-4	PNT	HMF-1	HM	2 / A801	1 / A801	-	4	06		

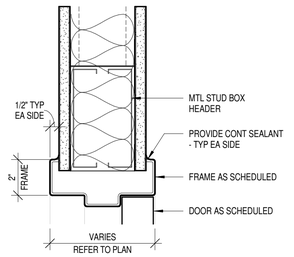

5 HEAD DETAIL - GYPSUM BOARD
3" = 1'-0"

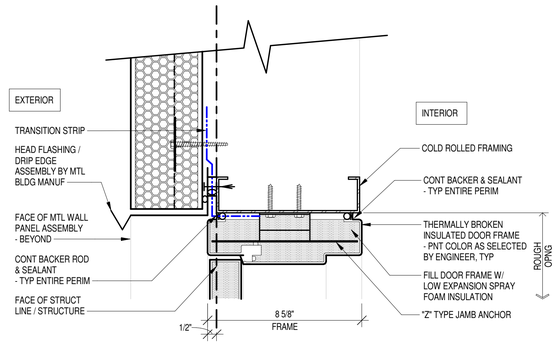

2 PERSONNEL DOOR - HEAD DETAIL
3" = 1'-0"

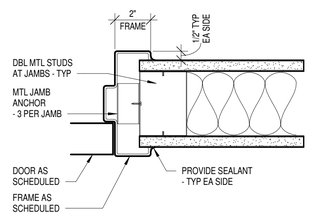

4 JAMB DETAIL - GYPSUM BOARD
3" = 1'-0"

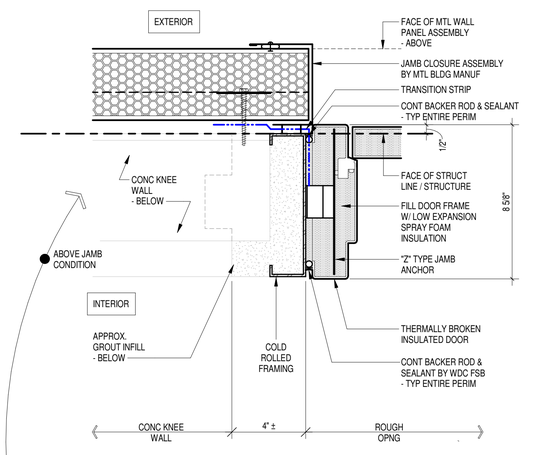

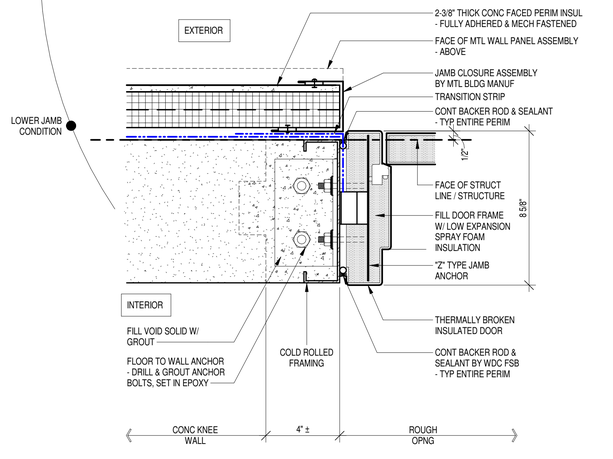

1 PERSONNEL DOOR - JAMB DETAIL
3" = 1'-0"

3 LOUVER ELEVATION
3/8" = 1'-0"

LOUVER SCHEDULE

TYPE	WIDTH	HEIGHT	COUNT	HEIGHT A.F.F.	COMMENTS
LV-1	2' - 4"	2' - 4"	1	7' - 2"	COORDINATE W/ HVAC REQUIREMENTS
LV-2	1' - 4"	1' - 4"	1	8' - 0"	COORDINATE W/ HVAC REQUIREMENTS
LV-3	1' - 4"	1' - 4"	1	18' - 0"	COORDINATE W/ HVAC REQUIREMENTS
LV-3	1' - 4"	1' - 4"	1	8' - 0"	COORDINATE W/ HVAC REQUIREMENTS
LV-3	1' - 4"	1' - 4"	1	8' - 0"	COORDINATE W/ HVAC REQUIREMENTS

LOUVER GENERAL NOTES:

- CONTRACTOR MAY INCREASE SIZE OF LOUVER AS REQUIRED IN ORDER TO ACHIEVE A MINIMUM OF 50% FREE AREA OF SIZES LISTED ON HVAC DRAWINGS AT NO ADDITIONAL COST TO THE OWNER.

INSULATED TRANSLUCENT PANEL ASSEMBLY SCHEDULE

TYPE	WIDTH	HEIGHT	COUNT	HT. AFF (1ST FLR)	COMMENTS
TP-1	11' - 6"	3'	4	12' - 0"	
TP-2	20' - 0"	3'	2	13' - 0"	

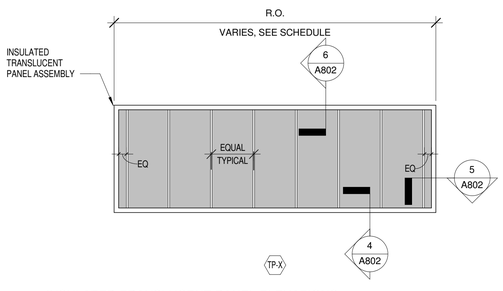

10 INSULATED TRANSLUCENT PANEL ELEVATIONS
3/8" = 1'-0"

FENESTRATION GENERAL NOTES:

1. ALL OVERALL DIMENSIONS ARE SHOWN TO ROUGH-OPENING / MASONRY OPENING UNLESS NOTED OTHERWISE. TYP.
2. JOINT SEALANTS REQUIRED PER SPECIFICATION SECTION (07 92 00): PROVIDE BACK ROD AND SEALANT AT PERIMETER OF ALL WALL OPENINGS INCLUDING, BUT NOT LIMITED TO, WINDOWS, DOORS, LOUVERS AND TRANSLUCENT PANELS, AT ALL INTERIOR AND EXTERIOR JOINTS.
3. TYPICAL JOINT WIDTH: 3/8", MAXIMUM JOINT WIDTH: 1/2"
4. ALL AIR VAPOR BARRIERS (AVB) AT OPENINGS SHALL RETURN TO THE INSIDE FACE OF THE ROUGH OPENING (TYP) ON SILL, HEAD, AND JAMB CONDITIONS.

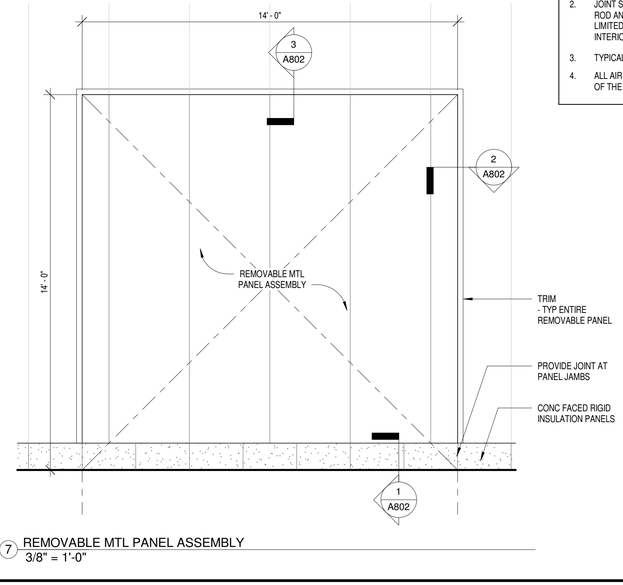

7 REMOVABLE MTL PANEL ASSEMBLY
3/8" = 1'-0"

Project:

TOWN OF BLACKSTONE, MASSACHUSETTS
DEPARTMENT OF PUBLIC WORKS

WATER TREATMENT PLANT

53 ELM STREET, BLACKSTONE, MASSACHUSETTS, 01504

Weston & Sampson

Weston & Sampson Engineers, Inc.
55 Walkers Brook Drive, Suite 100
Reading, MA 01867
978.532.1900 800.SAMPSON

www.westonandsampson.com

Consultants:

Revisions:

No.	Date	Description

COA:

"COPYRIGHT ©2021 BY WESTON & SAMPSON
THIS DRAWING HAS BEEN PREPARED FOR THE EXCLUSIVE USE OF THE CLIENT & PROJECT NAME LISTED ON THIS DRAWING ONLY.

REPRODUCTION, RELEASE OF UTILIZATION OF THE DRAWING CONTENT BY OTHER CLIENTS / FIRMS AND ON OTHER PROJECTS IS PROHIBITED BY LAW.

WESTON & SAMPSON RETAINS THE EXCLUSIVE USE OF THE INTELLECTUAL PROPERTY CONTAINED HEREIN.

Seal:

REGISTERED ARCHITECT — DANIEL G. TENNEY III — No. 6688 — CAMBRIDGE MA — COMMONWEALTH OF MASSACHUSETTS

Issued For:

BID DOCUMENTS

Scale: As indicated

Key Plan:

Date:	MAY 21, 2021
Drawn By:	MMF
Reviewed By:	BPM
Approved By:	JRC
W&S Project No.:	2200740
W&S File No.:	246 - 88

Drawing Title:

DOOR SCHEDULE, TYPES, & DETAILS

Sheet Number:

A801

COPYRIGHT © 2021 WESTON & SAMPSON, INC.

C:\Users\mcusiketb\OneDrive - WESTON & SAMPSON ENGINEERS, Inc\Documents\2200740_BlackstoneWTPDesign_Architecture_2020_mcusiketb.rvt
6/1/2021 1:22:44 PM

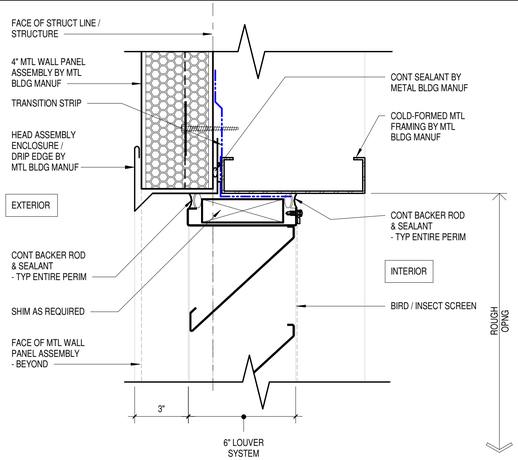

9 LOUVER HEAD DETAIL
3" = 1'-0" 3/ A801

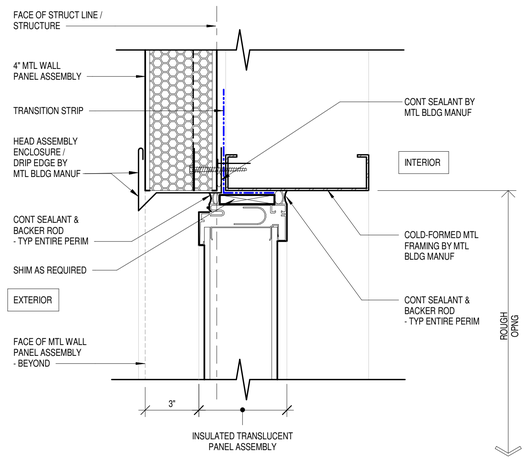

6 INSULATED TRANSLUCENT PANEL HEAD DETAIL
3" = 1'-0" 10/ A801

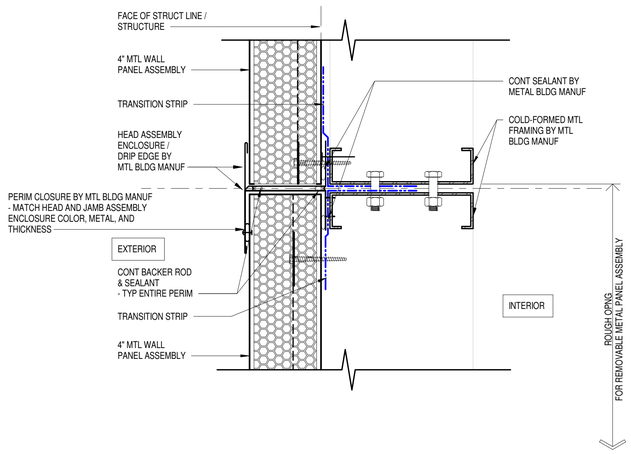

3 REMOVABLE PANEL W/ MTL PANEL - HEAD DETAIL
3" = 1'-0" 7/ A801

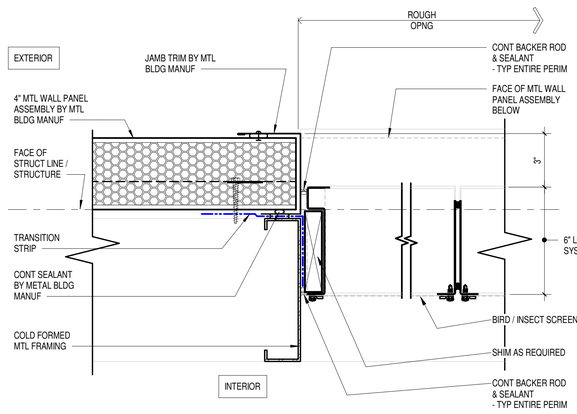

8 LOUVER JAMB DETAIL - MTL PANEL - BRAKE METAL
3" = 1'-0" 3/ A801

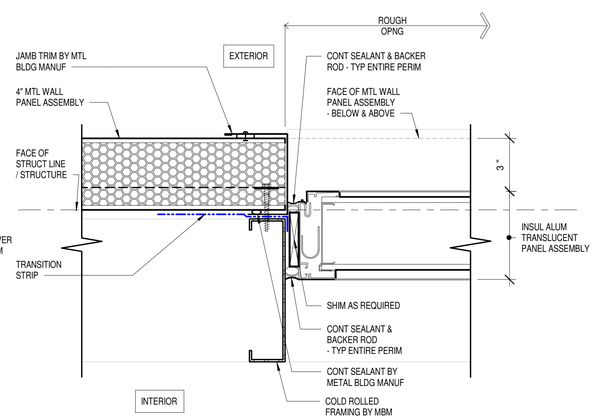

5 INSULATED TRANSLUCENT PANEL JAMB DETAIL
3" = 1'-0" 10/ A801

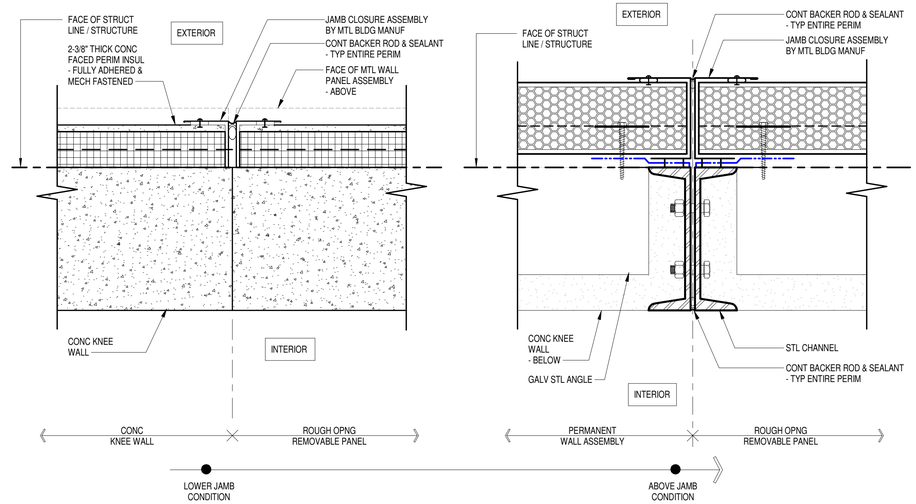

2 REMOVABLE PANEL W/ MTL PANEL - JAMB DETAIL
3" = 1'-0" 7/ A801

7 LOUVER SILL DETAIL
3" = 1'-0" 3/ A801

4 INSULATED TRANSLUCENT PANEL SILL DETAIL
3" = 1'-0" 10/ A801

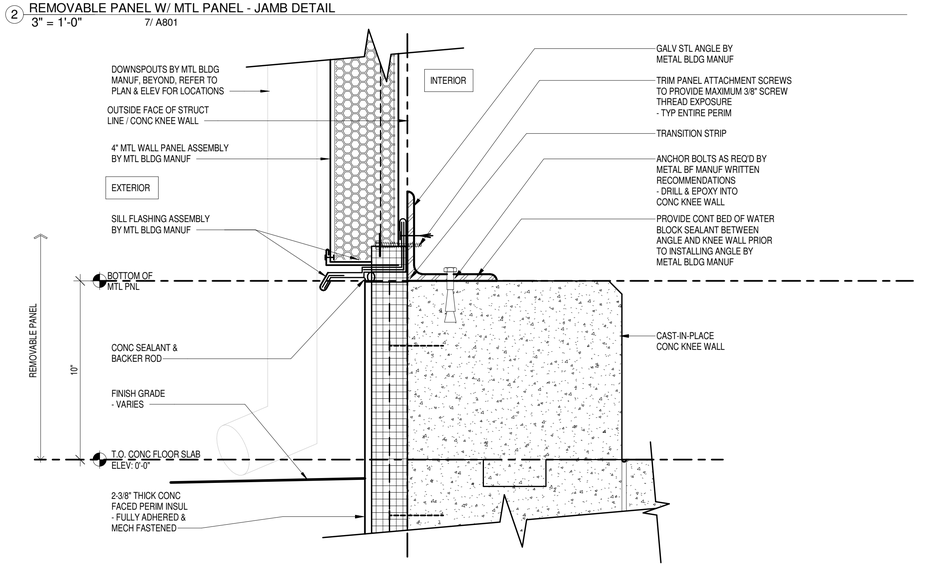

1 REMOVABLE PANEL - SILL DETAIL
3" = 1'-0" 7/ A801

Project:
TOWN OF BLACKSTONE, MASSACHUSETTS
DEPARTMENT OF PUBLIC WORKS
WATER TREATMENT PLANT
53 ELM STREET, BLACKSTONE, MASSACHUSETTS, 01504

Weston & Sampson
Weston & Sampson Engineers, Inc.
55 Walkers Brook Drive, Suite 100
Reading, MA 01867
978.532.1900 800.SAMPSON
www.westonandsampson.com

Consultants:

Revisions:

No.	Date	Description

COA:

©COPYRIGHT ©2021 BY WESTON & SAMPSON
THIS DRAWING HAS BEEN PREPARED FOR THE EXCLUSIVE USE OF THE CLIENT & PROJECT NAME LISTED ON THIS DRAWING ONLY.

REPRODUCTION, RELEASE OF UTILIZATION OF THE DRAWING CONTENT BY OTHER CLIENTS / FIRMS AND ON OTHER PROJECTS IS PROHIBITED BY LAW.

WESTON & SAMPSON RETAINS THE EXCLUSIVE USE OF THE INTELLECTUAL PROPERTY CONTAINED HEREIN.

Seal:

REGISTERED ARCHITECT
DANIEL G. TENNEY III
No. 6688
CAMBRIDGE
MA
COMMONWEALTH OF MASSACHUSETTS

Issued For:

BID DOCUMENTS

Scale: 3" = 1'-0"

Key Plan:

Date:	MAY 21, 2021
Drawn By:	MMF
Reviewed By:	BPM
Approved By:	JRC
W&S Project No.:	2200740
W&S File No.:	246 - 87

Drawing Title:

FENESTRATION DETAILS

Sheet Number:

A802

COPYRIGHT © 2021 WESTON & SAMPSON, INC.

6/1/2021 1:22:46 PM C:\Users\mcuskerb\OneDrive - WESTON & SAMPSON ENGINEERS, Inc\Documents\2200740_Blackstone\WTPDesign_Architecture_2020_mcuskerb.rvt

GENERAL DEMOLITION NOTES

1. CONTRACTOR SHALL VISIT THE SITE TO VERIFY AND BE FULLY AWARE OF EXISTING CONDITIONS PRIOR TO START OF WORK. CONTRACTOR SHALL IDENTIFY ALL EXISTING ITEMS OF WORK SCHEDULED TO REMAIN OR SALVAGED FOR REUSE.
2. ALL DEMOLITION WORK SHALL BE PERFORMED IN ACCORDANCE WITH STATE AND LOCAL REGULATIONS. CONTRACTOR SHALL SECURE AND PAY FOR ALL REQUIRED DEMOLITION PERMITS. THE CONTRACTOR SHALL MAKE ALL NECESSARY CONSTRUCTION NOTIFICATIONS AND APPLY FOR AND OBTAIN ALL NECESSARY CONSTRUCTION PERMITS/
3. COORDINATE ALL DEMOLITION OPERATIONS WITH OWNER FOR SHUTDOWN PERIODS AND SEQUENCE OF WORK. ARRANGE WITH OWNER AND/OR APPROPRIATE UTILITIES FOR SERVICE SHUTOFFS BEFORE BEGINNING DEMOLITION OPERATIONS. PROVIDE TEMPORARY DUST PARTITIONS, BARRICADES AND PROTECTIVE ENCLOSURES REQUIRED TO PROPERLY SECURE, ISOLATE AND WEATHERPROOF AREAS OF WORK AND EXISTING AREAS AND ELEMENTS TO REMAIN. THE CONTRACTOR SHALL PERFORM THE WORK OF THIS CONTRACT IN A MANNER THAT CAUSES NO DISRUPTION TO THE CONTINUOUS OCCUPATION OF THE BUILDING AND SITE FOR THEIR INTENDED PURPOSE.
4. REMOVE ALL DEMOLISHED MATERIALS IN ACCORDANCE WITH LOCAL REGULATIONS.
5. IT IS NOT THE INTENT TO SHOW EVERY PIECE OR ITEM TO BE REMOVED IN DEMOLITION WORK. PLUMBING, ELECTRICAL AND OTHER WORK RELATED TO A WALL, OR AREA SCHEDULED FOR DEMOLITION AND REMOVAL, SHALL BE PERFORMED WHETHER NOTED OR NOT.
6. THE EXTENT OF ALL SPECIFIC DEMOLITION WORK SHALL BE COORDINATED WITH CONTRACT DOCUMENTS.
7. CONTRACTOR TO PATCH/REPAIR/REFINISH, AS REQUIRED, ALL SURFACES EXPOSED BY DEMOLITION WORK WITH MATERIALS AND METHODS TO MATCH FINISH AND MAKE FLUSH WITH EXISTING ADJACENT SURFACES. WORK SHALL INCLUDE ALL LABOR AND MATERIALS ON ALL SURFACES REQUIRED TO RENDER SUBSTRATES ACCEPTABLE TO RECEIVE NEW FINISHES SPECIFIED IN ACCORDANCE WITH MANUFACTURER'S WRITTEN RECOMMENDATIONS.
8. TERMINATE, CAP, AND REMOVE ALL ABANDONED ELECTRICAL, PLUMBING, MECHANICAL AND FIRE PROTECTION ITEMS BACK TO ITS SOURCE. REFER TO MEP DRAWINGS FOR ADDITIONAL INFORMATION.
9. WHERE EXISTING FINISHES ARE INDICATED TO REMAIN AS BASE MATERIAL SURFACES FOR INSTALLATION OF NEW FINISHES, REMOVE ALL PROJECTIONS AND VOIDS AND SECURE OR REMOVE AND REPLACE ANY EXISTING LOOSE OR OTHERWISE UNSUITABLE SUBSTRATE MATERIAL.
10. REFER TO VARIOUS DISCIPLINE DEMOLITION PLANS FOR ADDITIONAL INFORMATION.
11. CONTRACTOR TO PROTECT ALL ITEMS TO REMAIN DURING DEMOLITION. ALL ITEMS DAMAGED DURING DEMOLITION ARE TO BE REPLACED AT NO EXPENSE TO THE OWNER.
12. CONTRACTOR IS RESPONSIBLE FOR MEANS & METHODS IN A SAFE MANNER FOR ALL DEMOLITION WORK.
13. THE CONTRACTOR SHALL BE SOLELY RESPONSIBLE FOR JOB SITE SAFETY AND ALL CONSTRUCTION MEANS AND METHODS. PRIOR TO BEGINNING CONSTRUCTION, CONTRACTOR SHALL WALK THE SITE WITH THE ARCHITECT TO GAIN A THOROUGH UNDERSTANDING OF THE PROJECT, INCLUDING ANY SPECIAL CONDITIONS AND CONSTRAINTS.

SPECIFIC DEMOLITION NOTES

1. REMOVE & DISPOSE OF EXISTING LOUVER ASSEMBLY. PREPARE OPENING FOR NEW DOOR.
2. REMOVE AND DISPOSE OF BRICK VENEER AND INSULATION
3. REMOVE AND DISPOSE OF TRANSLUCENT PANELS
4. REMOVE AND DISPOSE OF WINDOW AND FRAME
5. REMOVE AND DISPOSE OF DOOR AND FRAME
6. REMOVE AND DISPOSE OF METAL WALL PANEL ASSEMBLY
7. REMOVE AND DISPOSE OF CMU BLOCK
8. REMOVE & DISPOSE OF EXISTING CABINETINTRY. SHORE EXISTING COUNTER. COORDINATE NEW CABINETS WITH SPECIFICATION.

PLAN LEGEND

APPROXIMATE OUTLINE OF STRUCTRE / BUILDING TO BE DEMOLISHED
- CONTRACTOR TO V.I.F. EXACT DIMENSIONS IN FIELD

DOOR SCHEDULE - WELLS

DOOR #	DOOR WIDTH	DOOR HEIGHT	DOOR TYPE	DOOR MATERIAL	FRAMES TYPE	FRAMES MATERIAL	DETAILS HEAD	DETAILS JAMB	DETAILS SILL	HDWR SET	REMARKS
002	3' - 0"	7' - 0"	HM-1	HM	HMF-2	HM	4 / A1001	5 / A1001	6 / A1001	01	
007	3' - 0"	7' - 0"	EXIST	EXIST HM	EXIST	EXIST HM	-	-	6 / A1001	09	

VIEW D

VIEW B

VIEW C

VIEW A

WELL 4 PHOTOS
3/4" = 1'-0"

VIEW B

VIEW C

VIEW A

WELL 2 PHOTOS
3/4" = 1'-0"

VIEW C

VIEW B

VIEW A

WELL 7 PHOTOS
3/4" = 1'-0"

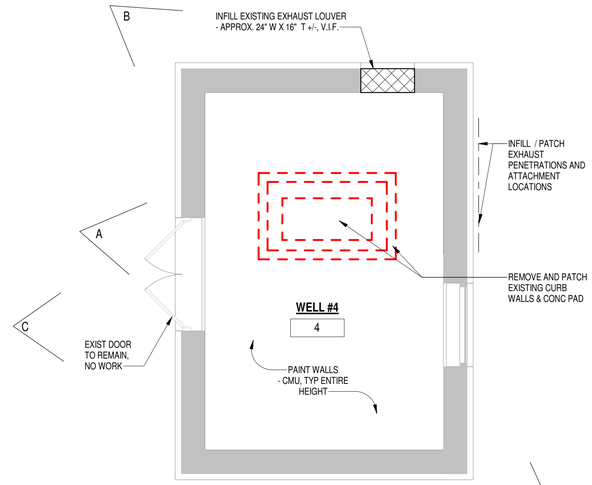

3 WELL #4 FLOOR PLAN
1/4" = 1'-0" 1/ A201

2 WELL #2 FLOOR PLAN
1/4" = 1'-0" 1/ A201

1 WELL #7 FLOOR PLAN
1/4" = 1'-0" 1/ A201

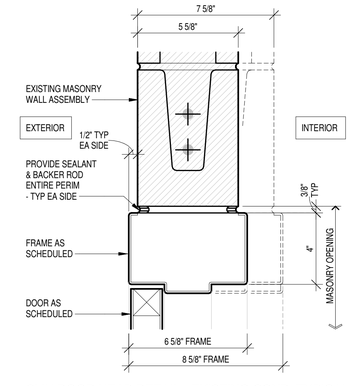

4 CMU DOOR HEAD DETAIL - EXISTING COND, TYPICAL FRAME
3" = 1'-0"

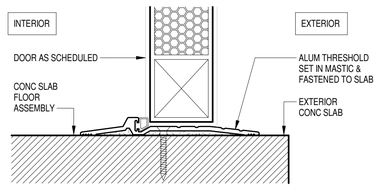

6 EXTERIOR DOOR SILL
6" = 1'-0"

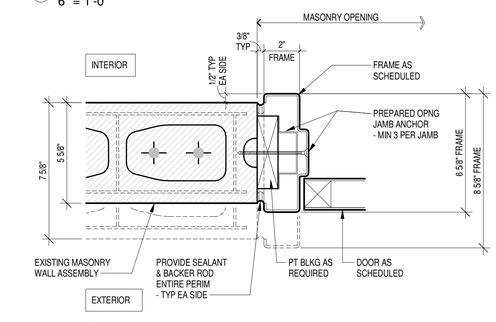

5 CMU DOOR JAMB DETAIL - EXISTING COND, TYPICAL FRAME
3" = 1'-0"

ALL WORK THIS DRAWING - ALTERNATE "1"

Project:
TOWN OF BLACKSTONE, MASSACHUSETTS
DEPARTMENT OF PUBLIC WORKS
WATER TREATMENT PLANT
53 ELM STREET, BLACKSTONE, MASSACHUSETTS, 01504

Weston & Sampson
Weston & Sampson Engineers, Inc.
55 Walkers Brook Drive, Suite 100
Reading, MA 01867
978.532.1900 800.SAMPSON
www.westonandsampson.com

Consultants:

Revisions:

No.	Date	Description

COA:
©COPYRIGHT ©2021 BY WESTON & SAMPSON
THIS DRAWING HAS BEEN PREPARED FOR THE EXCLUSIVE USE OF THE CLIENT & PROJECT NAME LISTED ON THIS DRAWING ONLY.
REPRODUCTION, RELEASE OF UTILIZATION OF THE DRAWING CONTENT BY OTHER CLIENTS / FIRMS AND ON OTHER PROJECTS IS PROHIBITED BY LAW.
WESTON & SAMPSON RETAINS THE EXCLUSIVE USE OF THE INTELLECTUAL PROPERTY CONTAINED HEREIN.

Seal:
REGISTERED ARCHITECT
DANIEL G. TENNEY III
No. 6688
CAMBRIDGE MA
COMMONWEALTH OF MASSACHUSETTS

Issued For:
BID DOCUMENTS

Scale: As indicated

Key Plan:

Date:	MAY 21, 2021
Drawn By:	MMF
Reviewed By:	BPM
Approved By:	JRC
W&S Project No.:	2200740
W&S File No.:	246 - 86

Drawing Title:
WELL PLANS I

Sheet Number:
A1001

COPYRIGHT © 2021 WESTON & SAMPSON, INC.

C:\Users\mcouskerb\OneDrive - WESTON & SAMPSON ENGINEERS, Inc\Documents\2200740_BlackstoneWTPDesign_Architecture_2020_mcouskerb.rvt
6/1/2021 1:23:17 PM

SPECIFIC DEMOLITION NOTES

1. REMOVE & DISPOSE OF EXISTING LOUVER ASSEMBLY. PREPARE OPENING FOR NEW DOOR.
2. REMOVE AND DISPOSE OF BRICK VENEER AND INSULATION
3. REMOVE AND DISPOSE OF TRANSLUCENT PANELS
4. REMOVE AND DISPOSE OF WINDOW AND FRAME
5. REMOVE AND DISPOSE OF DOOR AND FRAME
6. REMOVE AND DISPOSE OF METAL WALL PANEL ASSEMBLY
7. REMOVE AND DISPOSE OF CMU BLOCK
8. REMOVE & DISPOSE OF EXISTING CABINETINTRY. SHORE EXISTING COUNTER. COORDINATE NEW CABINETS WITH SPECIFICATION.

PLAN LEGEND

APPROXIMATE OUTLINE OF STRUCTRE / BUILDING TO BE DEMOLISHED
- CONTRACTOR TO V.I.F. EXACT DIMENSIONS IN FIELD

GENERAL DEMOLITION NOTES

1. CONTRACTOR SHALL VISIT THE SITE TO VERIFY AND BE FULLY AWARE OF EXISTING CONDITIONS PRIOR TO START OF WORK. CONTRACTOR SHALL IDENTIFY ALL EXISTING ITEMS OF WORK SCHEDULED TO REMAIN OR SALVAGED FOR REUSE.
2. ALL DEMOLITION WORK SHALL BE PERFORMED IN ACCORDANCE WITH STATE AND LOCAL REGULATIONS. CONTRACTOR SHALL SECURE AND PAY FOR ALL REQUIRED DEMOLITION PERMITS. THE CONTRACTOR SHALL MAKE ALL NECESSARY CONSTRUCTION NOTIFICATIONS AND APPLY FOR AND OBTAIN ALL NECESSARY CONSTRUCTION PERMITS/
3. COORDINATE ALL DEMOLITION OPERATIONS WITH OWNER FOR SHUTDOWN PERIODS AND SEQUENCE OF WORK. ARRANGE WITH OWNER AND/OR APPROPRIATE UTILITIES FOR SERVICE SHUTOFFS BEFORE BEGINNING DEMOLITION OPERATIONS. PROVIDE TEMPORARY DUST PARTITIONS, BARRICADES AND PROTECTIVE ENCLOSURES REQUIRED TO PROPERLY SECURE, ISOLATE AND WEATHERPROOF AREAS OF WORK AND EXISTING AREAS AND ELEMENTS TO REMAIN. THE CONTRACTOR SHALL PERFORM THE WORK OF THIS CONTRACT IN A MANNER THAT CAUSES NO DISRUPTION TO THE CONTINUOUS OCCUPATION OF THE BUILDING AND SITE FOR THEIR INTENDED PURPOSE.
4. REMOVE ALL DEMOLISHED MATERIALS IN ACCORDANCE WITH LOCAL REGULATIONS.
5. IT IS NOT THE INTENT TO SHOW EVERY PIECE OR ITEM TO BE REMOVED IN DEMOLITION WORK. PLUMBING, ELECTRICAL AND OTHER WORK RELATED TO A WALL, OR AREA SCHEDULED FOR DEMOLITION AND REMOVAL, SHALL BE PERFORMED WHETHER NOTED OR NOT.
6. THE EXTENT OF ALL SPECIFIC DEMOLITION WORK SHALL BE COORDINATED WITH CONTRACT DOCUMENTS.
7. CONTRACTOR TO PATCH/REPAIR/REFINISH, AS REQUIRED, ALL SURFACES EXPOSED BY DEMOLITION WORK WITH MATERIALS AND METHODS TO MATCH FINISH AND MAKE FLUSH WITH EXISTING ADJACENT SURFACES. WORK SHALL INCLUDE ALL LABOR AND MATERIALS ON ALL SURFACES REQUIRED TO RENDER SUBSTRATES ACCEPTABLE TO RECEIVE NEW FINISHES SPECIFIED IN ACCORDANCE WITH MANUFACTURER'S WRITTEN RECOMMENDATIONS.
8. TERMINATE, CAP, AND REMOVE ALL ABANDONED ELECTRICAL, PLUMBING, MECHANICAL AND FIRE PROTECTION ITEMS BACK TO ITS SOURCE. REFER TO MEP DRAWINGS FOR ADDITIONAL INFORMATION.
9. WHERE EXISTING FINISHES ARE INDICATED TO REMAIN AS BASE MATERIAL SURFACES FOR INSTALLATION OF NEW FINISHES, REMOVE ALL PROJECTIONS AND VOIDS AND SECURE OR REMOVE AND REPLACE ANY EXISTING LOOSE OR OTHERWISE UNSUITABLE SUBSTRATE MATERIAL.
10. REFER TO VARIOUS DISCIPLINE DEMOLITION PLANS FOR ADDITIONAL INFORMATION.
11. CONTRACTOR TO PROTECT ALL ITEMS TO REMAIN DURING DEMOLITION. ALL ITEMS DAMAGED DURING DEMOLITION ARE TO BE REPLACED AT NO EXPENSE TO THE OWNER.
12. CONTRACTOR IS RESPONSIBLE FOR MEANS & METHODS IN A SAFE MANNER FOR ALL DEMOLITION WORK.
13. THE CONTRACTOR SHALL BE SOLELY RESPONSIBLE FOR JOB SITE SAFETY AND ALL CONSTRUCTION MEANS AND METHODS. PRIOR TO BEGINNING CONSTRUCTION, CONTRACTOR SHALL WALK THE SITE WITH THE ARCHITECT TO GAIN A THOROUGH UNDERSTANDING OF THE PROJECT, INCLUDING ANY SPECIAL CONDITIONS AND CONSTRAINTS.

VIEW B

VIEW B

VIEW A

WELL 6 PHOTOS
3/4" = 1'-0"

VIEW B

VIEW C

VIEW A

WELL 5 PHOTOS
3/4" = 1'-0"

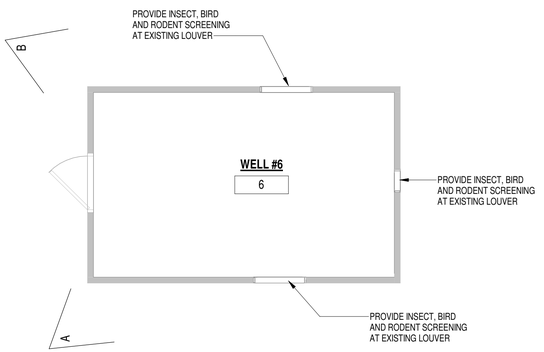

1 WELL #6 FLOOR PLAN
1/4" = 1'-0" 1/ A201

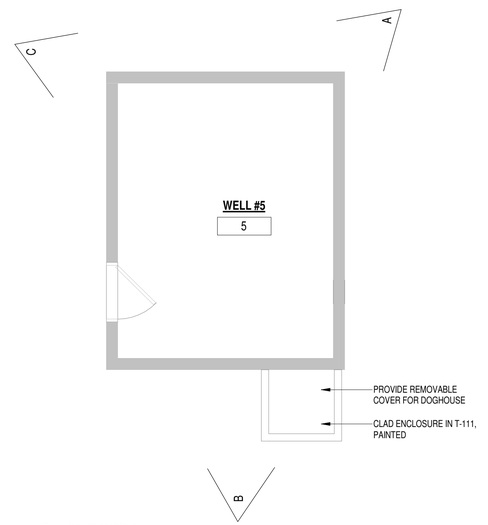

2 WELL #5 FLOOR PLAN
1/4" = 1'-0" 1/ A201

ALL WORK THIS DRAWING - ALTERNATE "1"

Project:

TOWN OF BLACKSTONE,
MASSACHUSETTS
DEPARTMENT OF PUBLIC WORKS

WATER TREATMENT PLANT

53 ELM STREET, BLACKSTONE,
MASSACHUSETTS, 01504

Weston & Sampson

Weston & Sampson Engineers, Inc.
55 Walkers Brook Drive, Suite 100
Reading, MA 01867
978.532.1900 800.SAMPSON

www.westonandsampson.com

Consultants:

Revisions:

No.	Date	Description

COA:

"COPYRIGHT ©2021 BY WESTON & SAMPSON
THIS DRAWING HAS BEEN PREPARED FOR THE EXCLUSIVE USE OF THE CLIENT & PROJECT NAME LISTED ON THIS DRAWING ONLY.

REPRODUCTION, RELEASE OF UTILIZATION OF THE DRAWING CONTENT BY OTHER CLIENTS / FIRMS AND ON OTHER PROJECTS IS PROHIBITED BY LAW.

WESTON & SAMPSON RETAINS THE EXCLUSIVE USE OF THE INTELLECTIAL PROPERTY CONTAINED HEREIN.

Seal:

Issued For:

BID DOCUMENTS

Scale: As indicated

Key Plan:

Date:	MAY 21, 2021
Drawn By:	MMF
Reviewed By:	BPM
Approved By:	JRC
W&S Project No.:	2200740
W&S File No.:	246 - 85

Drawing Title:

WELL PLANS II

Sheet Number:

A1002

COPYRIGHT © 2021 WESTON & SAMPSON, INC.

6/1/2021 1:23:33 PM C:\Users\mcsuskeb\OneDrive - WESTON & SAMPSON ENGINEERS, Inc\Documents\2200740_BlackstoneWTPDesign_Architecture_2020_mcsuskeb.rvt

1.0 - GENERAL

1.01 THE STRUCTURAL DRAWINGS SHALL BE USED IN CONJUNCTION WITH ALL OTHER CONTRACT DRAWINGS AND SPECIFICATIONS. REFER TO CIVIL, ARCHITECTURAL, MECHANICAL, PLUMBING, AND ELECTRICAL DRAWINGS FOR LOCATION, DIMENSIONS, AND DETAILS OF OPENINGS, SLEEVES, EMBEDMENTS, INSERTS, PADS, CURBS, DEPRESSIONS, ANCHOR BOLTS, AND OTHER PROJECT REQUIREMENTS NOT SHOWN ON STRUCTURAL DRAWINGS.

1.02 THE CONTRACTOR IS RESPONSIBLE FOR CHECKING, COORDINATING AND VERIFYING ALL DIMENSIONS IN THE FIELD PRIOR TO COMMENCING WORK. THE CONTRACTOR SHALL IMMEDIATELY REPORT ANY DISCREPANCY TO THE ARCHITECT AND ENGINEER AS A REQUEST FOR INFORMATION (RFI) BEFORE PROCEEDING WITH WORK.

1.03 THE CONTRACTOR IS RESPONSIBLE FOR VERIFYING IN THE FIELD THE EXISTENCE AND LOCATION OF OVERHEAD, BURIED AND/OR EMBEDDED UTILITIES, AND DETERMINING LOCATIONS OF ALL EMBEDDED MECHANICAL, ELECTRICAL AND PLUMBING SYSTEMS AFFECTED BY THE WORK OF THIS CONTRACT.

1.04 ALL WORK IS TO CONFORM WITH THE FOLLOWING CODES AND STANDARDS:

(A) "780 CMR: MASSACHUSETTS AMENDMENTS MASSACHUSETTS STATE BUILDING CODE" - 9TH EDITION (MSBC)
(B) INTERNATIONAL BUILDING CODE, (IBC 2015)
(C) "BUILDING CODE REQUIREMENTS FOR STRUCTURAL CONCRETE" - AMERICAN CONCRETE INSTITUTE (ACI 318)
(D) "MANUAL OF STEEL CONSTRUCTION" - AMERICAN INSTITUTE OF STEEL CONSTRUCTION (AISC 360)
(E) "STRUCTURAL WELDING CODE - STEEL" - AMERICAN WELDING SOCIETY (AWS D1.1)
(F) "SEISMIC PROVISION FOR STRUCTURAL STEEL BUILDINGS" -AMERICAN INSTITUTE OF STEEL CONSTRUCTION, (AISC)
(G) "MINIMUM DESIGN LOADS FOR BUILDINGS AND OTHER STRUCTURES" - AMERICAN SOCIETY OF CIVIL ENGINEERS, (ASCE 7-10)

FOR ADDITIONAL CODES AND STANDARDS REFER TO SPECIFICATIONS.

1.05 THE CONTRACTOR SHALL NOTIFY THE ARCHITECT AND ENGINEER OF UNFORESEEN CONDITIONS THAT MAY BE UNCOVERED DURING DEMOLITION AND CONSTRUCTION AS A REQUEST FOR INFORMATION (RFI) BEFORE PROCEEDING WITH WORK.

1.06 PERMANENT STRUCTURAL ELEMENTS TO BE DESIGNED IN ACCORDANCE WITH PERFORMANCE SPECIFICATIONS INCLUDE, BUT ARE NOT LIMITED TO, THE FOLLOWING:

(A) PRE-ENGINEERED METAL BUILDING
(B) MISC. ARCH COMPONENT SEISMIC SUPPORTS
(C) MISC. MECHANICAL AND ELECTRICAL COMPONENT AND SYSTEM SEISMIC SUPPORTS
(D) LIGHT GAUGE COLD FORMED STEEL FRAMING

FOR PERFORMANCE DESIGN REQUIREMENTS OF ELEMENTS LISTED ABOVE, REFER TO ADDITIONAL NOTES ON THESE SHEETS AND IN THE TECHNICAL SPECIFICATIONS. ALL DESIGN SUBMITTAL DRAWINGS AND CALCULATIONS SHALL BE CERTIFIED, SIGNED AND SEALED BY A PROFESSIONAL STRUCTURAL ENGINEER REGISTERED IN THE STATE OF MASSACHUSETTS.

1.07 STRUCTURAL REQUIREMENTS TO ACCOMMODATE FIXED EQUIPMENT, INCLUDING BUT NOT LIMITED TO ROOF TOP UNITS ARE INCIDENTAL TO THE REQUIREMENTS OF A SPECIFIC EQUIPMENT MANUFACTURER. ALL WORK SHALL CONFORM TO APPROVED EQUIPMENT MANUFACTURER'S SHOP DRAWINGS AND INSTALLATION INSTRUCTIONS. THE CONTRACTOR SHALL SUBMIT TO THE ENGINEER FOR APPROVAL ANY REQUIRED MODIFICATIONS TO ACCOMMODATE APPROVED EQUIPMENT DRAWINGS. SUCH MODIFICATIONS SHALL BE MADE AT NO COST TO THE OWNER.

1.08 DETAILS AND NOTES SHOWN ON STRUCTURAL DRAWINGS SHALL BE APPLICABLE TO ALL PARTS OF THE STRUCTURAL WORK EXCEPT WHERE SPECIFICALLY REQUIRED OTHERWISE BY CONTRACT DOCUMENTS. CONDITIONS NOT SPECIFICALLY SHOWN SHALL BE SIMILAR TO THOSE SHOWN FOR LIKE CONDITIONS AS DETERMINED BY THE ENGINEER.

1.09 IN ACCORDANCE WITH SPECIFICATION SECTION 01 45 23, TESTING AND INSPECTION OF STRUCTURAL WORK SHALL BE THE RESPONSIBILITY OF THE CONTRACTOR. THE COSTS FOR TESTING AND INSPECTIONS WILL BE PAID BY THE CONTRACTOR. PROVIDE TEST RESULTS TO THE ENGINEER IN A TIMELY MANNER.

1.10 THE CONTRACTOR SHALL DESIGN AND PROVIDE ALL REQUIRED SHORING AND TEMPORARY BRACING TO RESIST FORCES ON THE STRUCTURE THROUGHOUT THE CONSTRUCTION PERIOD.

2.0 - FOUNDATIONS

2.01 THE SUBSURFACE CONDITIONS DESCRIBED IN THE DRAWINGS, SPECIFICATIONS, TEST BORINGS AND TEST PITS ARE INCLUDED ONLY TO ASSIST THE CONTRACTOR DURING BIDDING AND SUBSEQUENT CONSTRUCTION AND REPRESENT CONDITIONS ONLY AT THESE SPECIFIC LOCATIONS AT THE TIME THEY ARE MADE.

2.02 THE CONTRACTOR SHALL DESIGN AND PROVIDE ALL TEMPORARY EARTH SUPPORT, SHORING AND BRACING REQUIRED TO PERFORM THE WORK IN ACCORDANCE WITH OSHA, STATE AND LOCAL REQUIREMENTS.

2.03 THE CONTRACTOR SHALL DESIGN AND PROVIDE SHEETING, SHORING, BRACING, AND/OR UNDERPINNING IN ORDER TO PROTECT EXISTING UTILITIES FROM EXCESSIVE MOVEMENTS DURING THE CONSTRUCTION PERIOD, IN ACCORDANCE WITH OSHA, STATE & LOCAL REQUIREMENTS.

2.04 THE CONTRACTOR SHALL CARRY OUT CONTINUOUS CONTROL OF SURFACE AND SUBSURFACE WATER. DEWATER ANY AREAS REQUIRING EXCAVATION IN ADVANCE OF PERFORMING EXCAVATION. MAINTAIN GROUNDWATER LEVELS AT LEAST 2 FEET BELOW PLANNED SUBGRADES.

2.05 ALL SUBGRADES TO RECEIVE FILL MATERIALS, FOUNDATIONS, SLABS OR OTHER CONSTRUCTION SHALL BE FREE OF RUNNING OR STANDING WATER PRIOR TO PLACEMENT.

2.06 SPREAD FOOTINGS AND PIERS AS SHOWN ARE DESIGNED FOR ESTIMATED METAL BUILDING REACTIONS AND ARE APPROXIMATE IN SIZE. THESE ELEMENTS ARE SUBJECT TO CHANGE IN DIMENSION (IF REQUIRED) WITH THE APPROVED METAL BUILDING SUBMITTAL. ANY CHANGES SHALL COME AT NO ADDITIONAL COST TO THE OWNER.

2.07 FOUNDATIONS SHALL BE INSTALLED IN THE GEOMETRY SHOWN IN THE PLANS, ANY ROCK ENCOUNTERED DURING EXCAVATION SHALL BE REMOVED TO CLEAR THE REQUIRED FOUNDATION GEOMETRY.

2.08 SPREAD FOOTING BEARING SURFACES SHALL BE EXCAVATED BY EQUIPMENT WITH A SMOOTH, TOOTHLESS CUTTING EDGE.

2.09 THE GEOTECHNICAL REPORT PREPARED BY WESTON & SAMPSON DATED 05/21/2020 IS PROVIDED FOR INFORMATION PURPOSES ONLY.

3.0 - CAST IN PLACE CONCRETE

3.01 CONCRETE WORK SHALL CONFORM TO "BUILDING CODE REQUIREMENTS FOR REINFORCED CONCRETE" (ACI 318) AND "SPECIFICATIONS FOR STRUCTURAL CONCRETE FOR BUILDINGS" (ACI 301).

3.02 CONCRETE SHALL BE CONTROLLED CONCRETE, PROPORTIONED, MIXED AND PLACED IN THE PRESENCE OF A REPRESENTATIVE OF AN APPROVED TESTING AGENCY.

3.03 UNLESS NOTED OTHERWISE, CONCRETE SHALL BE NORMAL WEIGHT AND HAVE A MINIMUM 28 DAY COMPRESSIVE STRENGTH AS FOLLOWS:

(A) ALL STRUCTURAL CONCRETE: 4500 PSI
(B) EXTERIOR WALKS AND SLABS: 4500 PSI

3.04 ALL PERMANENTLY EXPOSED VERTICAL AND HORIZONTAL CONCRETE SURFACES SHALL BE TREATED OR SEALED IN ACCORDANCE WITH PROJECT SPECIFICATIONS.

3.05 CONCRETE WORK SHALL BE COORDINATED WITH ALL METAL BUILDINGS, ARCHITECTURAL, MECHANICAL, PLUMBING, ELECTRICAL WORK, AND ALL EQUIPMENT. THE CONTRACTOR SHALL VERIFY INSTALLATION AND LOCATIONS OF ALL EMBEDDED ITEMS INCLUDING BUT NOT LIMITED TO INSERTS, ANCHOR BOLTS, DOWELS, BLOCKOUTS, SLEEVES, EMBEDDED PIPING, AND EMBEDDED CONDUIT PRIOR TO CONCRETE PLACEMENT.

3.06 FOR STRUCTURAL ELEMENTS, THE LOCATIONS AND MAXIMUM SPACINGS OF VERTICAL JOINTS SHALL BE AS FOLLOWS:

ELEMENT	JOINT TYPE	SPACING, FT.	LOCATIONS
FOUNDATION WALL	CONTRACTION	30	FACE OF
FOUNDATION WALL	CONSTRUCTION	60	PILASTER

3.07 FOR SLABS-ON-GRADE, LOCATE CONSTRUCTION OR CONTROL JOINTS ALONG COLUMN LINES OR AS SHOWN. PROVIDE JOINTS AT 20FT. MAX. SPACING. SUBMIT JOINT LOCATIONS AND DETAILS FOR APPROVAL.

3.08 SEALANT FOR CONTROL/CONTRACTION JOINTS AND SAW CUT JOINTS SHALL BE SIKADUR 51 MANUFACTURED BY SIKA OR AN APPROVED EQUAL.

3.09 CONCRETE EXPOSED TO WEATHER (FREEZE-THAW CONDITIONS) IN THE FINISHED PROJECT SHALL BE AIR ENTRAINED PER SPECIFICATIONS REQUIREMENTS.

3.10 A MINIMUM OF 72 HOURS SHALL ELAPSE BETWEEN ADJACENT CONCRETE PLACEMENTS.

3.11 CONCRETE SLABS SHALL BE PLACED SO THAT THE SLAB THICKNESS IS AT NO POINT LESS THAN THAT INDICATED ON THE DRAWINGS.

3.12 PROVIDE A 3/4" CHAMFER ON ALL VERTICAL AND HORIZONTAL CORNERS EXPOSED TO VIEW UNLESS NOTED OTHERWISE.

3.13 ALL CONCRETE SHALL BE WATER CURED UNLESS OTHERWISE AUTHORIZED BY THE ENGINEER.

3.14 NON-SHRINK, NON-METALLIC, GROUT SHALL HAVE A MINIMUM 28-DAY COMPRESSIVE STRENGTH OF 7,500 PSI (ASTM C942) AND A MINIMUM BOND STRENGTH OF 2,000 PSI AT 28-DAYS (ASTM C882). GROUT MAY BE EXTENDED WITH COARSE AGGREGATE PER THE MANUFACTURER'S RECOMMENDATIONS.

4.0 - CAST IN PLACE CONCRETE REINFORCEMENT

4.01 REINFORCEMENT DETAILING, FABRICATION, AND ERECTION SHALL CONFORM TO "ACI DETAILING MANUAL" - SP-66, "CRSI MANUAL OF STANDARD PRACTICE".

4.02 STEEL REINFORCEMENT, UNLESS NOTED OTHERWISE, SHALL CONFORM TO THE FOLLOWING:

(A) BARS, TIES, AND STIRRUPS___ASTM A615 GRADE 60
(B) WELDED WIRE FABRIC,ASTM A185, FLAT SHEETS

4.03 REINFORCING STEEL SHALL BE GALVANIZED AND DEFORMED.

4.04 MINIMUM CONCRETE PROTECTIVE COVERING FOR REINFORCEMENT, UNLESS REQUIRED FOR FIRE PROTECTION OR NOTED OTHERWISE, SHALL BE AS FOLLOWS:

(A) CONCRETE CAST AGAINST AND PERMANENTLY EXPOSED TO EARTH:____3"
(B) CONCRETE EXPOSED TO EARTH OR WEATHER:
  (1) NO. 6 THRU NO. 18 BARS____2"
  (2) NO. 5 BAR, W31 OR D31 WIRE AND SMALLER____2"
(C) SURFACES NOT EXPOSED TO WEATHER OR IN CONTACT WITH GROUND:
  (1) SLABS, WALLS, JOISTS:
    (a) NO. 14 AND NO 18 BARS____2"
    (b) NO. 11 BARS AND SMALLER____2"
  (2) BEAMS, COLUMNS:
    (a) PRIMARY REINFORCEMENT_____2-1/2"
    (b) TIES, STIRRUPS, SPIRALS____2"

4.05 REINFORCING STEEL SHALL BE CONTINUOUS THROUGH ALL CONSTRUCTION JOINTS, CORNERS, AND INTERSECTIONS UNLESS OTHERWISE NOTED. REINFORCING SHALL BE LAPPED AT NECESSARY SPLICES OR HOOKED AT DISCONTINUOUS ENDS, UNLESS OTHERWISE NOTED.

4.06 FOR REINFORCING STEEL SPLICE LAP LENGTHS REFER TO THE TABLE PROVIDED UNLESS OTHERWISE INDICATED.

4.07 MECHANICAL SPLICES SHALL BE PERMITTED SUBJECT TO APPROVAL BY THE ENGINEER. MECHANICAL SPLICES SHALL DEVELOP AT LEAST 125 PERCENT OF THE SPECIFIED YIELD STRENGTH OF THE BAR. NO WELDED CONNECTIONS ARE PERMITTED.

4.08 WELDED WIRE FABRIC SHALL BE LAPPED (1) SQUARE PLUS (2) INCHES WHERE REQUIRED AND SHALL BE WIRED TOGETHER AT ALL LAPS. WWF SHALL BE SUPPORTED BY CHAIRS AND/OR CARRYING BARS PRIOR TO CONCRETE PLACEMENT.

4.09 REINFORCEMENT SHALL NOT BE TACK WELDED.

4.10 NOTIFY THE TESTING LAB AND ENGINEER A MINIMUM OF 48 HOURS PRIOR TO SCHEDULED CONCRETE PLACEMENT IN ORDER TO ACCOMMODATE INSPECTION OF REINFORCEMENT AND CONCRETE TESTING. NO CONCRETE SHALL BE PLACED WITHIN 48 HOURS OF SUCH NOTIFICATION.

4.11 WHERE REINFORCEMENT IS NOT SHOWN ON DRAWINGS, PROVIDE REINFORCEMENT IN ACCORDANCE WITH APPLICABLE DETAILS AS DETERMINED BY THE ARCHITECT AND ENGINEER. IN NO CASE SHALL REINFORCEMENT BE LESS THAN THE MINIMUM REINFORCEMENT PERMITTED BY THE CODES, NOR LESS THAN THE FOLLOWING:

(A) BEAM STIRRUPS: #3 @ 12"
(B) BEAM STIRRUP SUPPORTS: 1-#5 AT EACH STIRRUP BEND
(C) FACE REINFORCEMENT IN BEAMS OR PORTIONS OF BEAMS #4 @ 12" E.F.
(D) STRUCTURAL SLABS: 0.0020 X GROSS CONCRETE AREA IN EACH DIRECTION
(E) CONCRETE WALLS: 0.0025 X GROSS CONCRETE AREA IN EACH DIRECTION

4.12 WHERE REINFORCEMENT IS REQUIRED IN SECTION, REINFORCEMENT IS CONSIDERED TYPICAL WHEREVER THE SECTIONS APPLIES.

4.13 WHERE THERE IS CONFLICT BETWEEN LOCATIONS OF COLUMN VERTICAL BARS AND BEAM HORIZONTAL BARS, THE COLUMN BARS SHALL REMAIN IN THEIR DESIGNATED POSITIONS AND BEAM BAR LOCATIONS SHALL BE ADJUSTED.

4.14 DOWELS SHALL MATCH BAR SIZE, NUMBER AND SPACING, UNLESS NOTED OTHERWISE.

6.0 - STRUCTURAL STEEL

6.01 STRUCTURAL STEEL DESIGN, FABRICATION AND ERECTION SHALL CONFORM TO THE AISC "MANUAL OF STEEL CONSTRUCTION", "SPECIFICATION FOR STRUCTURAL STEEL BUILDINGS AND BRIDGES" (ANSI/AISC 360-10), AND "CODE OF STANDARD PRACTICE FOR STEEL BUILDINGS AND BRIDGES" (ANSI/AISC 303-10).

6.02 STRUCTURAL STEEL SHALL BE NEW STEEL CONFORMING TO THE FOLLOWING:

(A) WIDE FLANGE SHAPES:_____ASTM A992
(B) OTHER STEEL SHAPES, PLATES AND BARS:_____ASTM A572 OR ASTM A36.
(C) STRUCTURAL TUBING:_____ASTM A500 GR B.

6.03 ALL WELDED CONNECTIONS SHALL BE MADE BY APPROVED CERTIFIED WELDERS AND SHALL CONFORM TO A.W.S. SPECIFICATIONS AMENDED TO DATE. ELECTRODES SHALL BE E70XX.

6.04 BOLTS SHALL CONFORM TO ASTM A325 AND BE INSTALLED SNUG-TIGHT UNLESS NOTED OTHERWISE

6.05 STRUCTURAL STEEL FRAMING SHALL BE WITHIN TOLERANCE BEFORE CONNECTIONS ARE FINALLY BOLTED OR WELDED.

6.06 FIELD CUTTING OF STRUCTURAL STEEL OR ANY FIELD MODIFICATIONS OF STRUCTURAL STEEL SHALL NOT BE MADE WITHOUT PRIOR WRITTEN APPROVAL BY THE ENGINEER FOR EACH SPECIFIC USE.

6.07 STRUCTURAL STEEL SHAPES AND PLATES SHALL BE HOT-DIPPED GALVANIZED PER ASTM A123 U.N.O. FASTENERS SHALL BE HOT-DIPPED GALVANIZED PER ASTM A153 U.N.O. HOT-DIPPED GALVANIZING SHALL ALSO CONFORM TO ASTM A385. THE GALVANIZER SHALL SUBMIT A CERTIFICATE OF CONFORMANCE FOR RECORD.

6.08 PROVIDE FIELD TOUCH-UP AND REPAIR OF GALVANIZING AS REQUIRED PER ASTM A780 USING AN INORGANIC ZINC-RICH PRIMER.

6.09 WHEN DISSIMILAR METALS ARE IN CONTACT (E.G. STAINLESS STEEL IN CONTACT WITH GALVANIZED STEEL), COAT SURFACE WITH COAL TAR EPOXY OR PROVIDE OTHER APPROVED MEANS TO PROVIDE A BARRIER.

6.10 WELDS SHALL BE 1/4" FILLET WELDS MINIMUM UNLESS NOTED OTHERWISE ON THE DRAWINGS.

6.11 PROVIDE TEMPORARY ERECTION BRACING AND SUPPORTS TO HOLD STRUCTURAL STEEL FRAMING SECURELY IN POSITION. SUCH TEMPORARY BRACING AND SUPPORTS SHALL NOT BE REMOVED UNTIL PERMANENT BRACING HAS BEEN INSTALLED.

6.12 SUBMIT SHOP DRAWINGS AND PRODUCT DATA FOR APPROVAL PRIOR TO FABRICATION.

7.0 - PRE-ENGINEERED METAL BUILDING

7.01 THE PRE-ENGINEERED METAL BUILDING STRUCTURAL SYSTEMS SHALL INCLUDE, BUT NOT BE LIMITED TO, ALL PRIMARY, SECONDARY, AND SUPPLEMENTAL FRAMING. THE METAL BUILDING SYSTEM SHALL FOLLOW THE DIMENSIONS, CLEARANCE REQUIREMENT AND SPECIFICATION SHOWN ON THE ARCHITECTURAL DRAWINGS.

7.02 FOR FRAMED OPENINGS AND OTHER INFORMATION NOT SHOWN ON STRUCTURAL DRAWINGS, REFER TO ARCHITECTURAL, EQUIPMENT, PLUMBING, MECHANICAL, AND ELECTRICAL DRAWINGS.

7.03 FOR ROOF-SUSPENDED AND WALL HUNG HVAC UNITS AND OTHER SUSPENDED MECHANICAL EQUIPMENT, REFER TO MECHANICAL AND EQUIPMENT DRAWINGS.

7.04 THE METAL BUILDING SYSTEMS SHALL INCLUDE ROOF CURBS, SUPPLEMENTAL FRAMING AND/OR SPECIAL PURLIN AND GIRT DESIGNS TO ACCOMMODATE LOCATIONS, DETAILS, AND CONCENTRATED DEAD LOADS OF ALL ROOF-TOP, ROOF-SUSPENDED, LIGHTING AND WALL HUNG EQUIPMENT AND SYSTEMS. THE CONTRACTOR SHALL COORDINATE ALL EQUIPMENT LOCATIONS, ATTACHMENT REQUIREMENTS, AND ACTUAL WEIGHTS WITH THE METAL BUILDING MANUFACTURER. THE CONTRACTOR (OR THE INSTALLING SUBCONTRACTOR) SHALL PROVIDE ALL HANGERS AND SUPPORTS FOR EQUIPMENT AND SYSTEMS INSTALLATION. HANGERS AND SUPPORTS SHALL COMPLY WITH THE PRE-ENGINEERED METAL BUILDING MANUFACTURERS RECOMMENDATIONS AND SUGGESTED DETAILS. IF THE ROOF PURLINS CANNOT SUPPORT THE WEIGHT OF THE BUILDING SYSTEMS AND EQUIPMENT SHOWN IN THESE CONTRACT DOCUMENTS, THEN THE METAL BUILDING MANUFACTURER SHALL PROVIDE SUPPLEMENTAL FRAMING TO SUPPORT THE REQUIRED BUILDING SYSTEMS AND EQUIPMENT LOADS AT NO ADDITIONAL COST TO THE OWNER.

7.05 THE PRE-ENGINEERED METAL BUILDING SHALL BE ERECTED IN STRICT CONFORMANCE WITH THE MANUFACTURER'S ERECTION DRAWINGS AND INSTALLATION INSTRUCTIONS .

7.06 THE PRE-ENGINEERED METAL BUILDING MANUFACTURER, PRIOR TO SUBMITTING FOUNDATION REINFORCING SHOP DRAWINGS, SHALL SUBMIT ANCHOR BOLT PLANS, COLUMN BASE PLATE DETAILS, AND FOUNDATION REACTIONS TO THE ENGINEER FOR APPROVAL. FOUNDATIONS FOR THE PRE-ENGINEERED METAL BUILDING SHALL NOT BE CONSTRUCTED UNTIL THE ANCHOR BOLT PLANS, COLUMN BASE PLATE DETAILS, AND FOUNDATION REACTIONS SHOP DRAWINGS HAVE BEEN APPROVED BY THE ENGINEER.

7.07 THE CONTRACTOR SHALL FURNISH ALL ANCHOR BOLTS FOR THE PRE-ENGINEERED METAL BUILDING. THE ANCHOR BOLT LAYOUT, QUANTITY, SIZE, AND PROJECTION SHALL BE IN ACCORDANCE WITH THE PRE-ENGINEERED METAL BUILDING MANUFACTURER'S APPROVED ANCHOR BOLT PLANS. THE ANCHOR BOLT DETAILS AND EMBEDMENT LENGTH SHALL BE IN ACCORDANCE WITH THE STRUCTURAL DRAWINGS.

7.08 ALL WORK SHALL CONFORM WITH THE APPROVED SHOP DRAWINGS. NO MODIFICATIONS TO THE PRE-ENGINEERED METAL BUILDING SHALL BE MADE WITHOUT AUTHORIZATION BY THE PRE-ENGINEERED METAL BUILDING MANUFACTURER AND APPROVAL OF THE ARCHITECT AND ENGINEER.

7.09 THE PRE-ENGINEERED METAL BUILDING FOUNDATIONS HAVE BEEN DESIGNED AND DETAILED TO ACCOMMODATE THE TYPICAL REQUIREMENTS OF A PRE-ENGINEERED METAL BUILDING. THE CONTRACTOR SHALL SUBMIT TO THE ENGINEER FOR APPROVAL ANY REQUIRED MODIFICATIONS TO ACCOMMODATE ANY SPECIFIC REQUIREMENTS OF THE APPROVED PRE-ENGINEERED METAL BUILDING MANUFACTURER. THE COSTS OF SUCH MODIFICATION SHALL BE BORNE BY THE CONTRACTOR.

7.10 ALL PRIMARY, SECONDARY, AND SUPPLEMENTAL FRAMING SHALL BE HOT-DIPPED GALVANIZED. THIS INCLUDES BUT IS NOT LIMITED TO SECONDARY FRAMING FOR OVERHEAD DOORS, PERSONNEL DOORS, WINDOWS, AND TRANSLUCENT PANELS AND ALL FASTENERS.

7.11 PROTECT PRE-ENGINEERED METAL BUILDING COMPONENTS FROM WEATHER. REPAIR DAMAGED COATINGS AND AREAS OF RUST.

7.12 METAL BUILDING DESIGN DRIFT LIMITS FOR SHALL BE LIMITED TO H/200 FOR A 10 YEAR WIND.

7.13 BUILDING DEFLECTION LIMITS SHALL CONFORM TO THE REQUIREMENTS LISTED IN THE EIGHTH EDITION OF THE MASSACHUSETTS STATE BUILDING CODE, AND THE TABLE ON THIS SHEET, WHICHEVER IS MORE STRINGENT.

7.14 THE METAL BUILDING SYSTEMS SHALL INCLUDE (2) MONORAIL TRACKS AND FRAME SUPPORTS PER SPECIFICATION 41 22 23.19. COORDINATE WITH PROCESS DRAWINGS FOR CRANE TYPE AND LOCATIONS.

8.0 - POST INSTALLED CONCRETE ANCHORS AND REINFORCING DOWELS

8.01 ADHESIVE ANCHORS AND REINFORCING DOWELS SHALL BE HILTI HIT-HY-200 ADHESIVE ANCHORING SYSTEM OR APPROVED EQUAL.

8.02 EXPANSION ANCHORS SHALL BE HILTI KWIK BOLT TZ EXPANSION ANCHORS OR APPROVED EQUAL.

8.03 INSTALL ANCHORS IN STRICT CONFORMANCE WITH THE MANUFACTURER'S REQUIREMENTS.

8.04 HOLES SHALL BE THOROUGHLY CLEANED AND DRY PRIOR TO INSTALLING ANCHORS.

8.05 DO NOT DAMAGE EXISTING REINFORCING. LOCATE REINFORCING WITH PROFOMETER OR OTHER MEANS PRIOR TO DRILLING CONCRETE.

8.06 ANCHORS INSTALLED OVERHEAD SHALL BE PROOF TESTED BY THE MANUFACTURER'S FIELD ENGINEER OR OTHER APPROVED AGENCY. PROOF TEST A MINIMUM OF 25% OF THE ANCHORS OR (2) TOTAL, WHICHEVER IS GREATER.

C:\Users\shaw.erica\OneDrive - WESTON & SAMPSON ENGINEERS, Inc\Documents\2200740_Blackstone WTP_STRUCTURAL_Rvt2020_Shaw Erica.rvt
6/1/2021 9:03:29 AM

Project:

TOWN OF BLACKSTONE, MASSACHUSETTS
DEPARTMENT OF PUBLIC WORKS

BLACKSTONE WATER TREATMENT PLANT

53 ELM STREET, BLACKSTONE, MASSACHUSETTS, 01504

Weston & Sampson
Weston & Sampson Engineers, Inc.
55 Walkers Brook Drive, Suite 100
Reading, MA 01867
978.532.1900 800.SAMPSON
www.westonandsampson.com

Consultants:

Revisions:

No.	Date	Description

COA:

©COPYRIGHT ©2021 BY WESTON & SAMPSON
THIS DRAWING HAS BEEN PREPARED FOR THE EXCLUSIVE USE OF THE CLIENT & PROJECT NAME LISTED ON THIS DRAWING ONLY.

REPRODUCTION, RELEASE OF UTILIZATION OF THE DRAWING CONTENT BY OTHER CLIENTS / FIRMS AND ON OTHER PROJECTS IS PROHIBITED BY LAW.

WESTON & SAMPSON RETAINS THE EXCLUSIVE USE OF THE INTELLECTUAL PROPERTY CONTAINED HEREIN.

Seal:

COMMONWEALTH OF MASSACHUSETTS
NATHAN M. SEIFERT
STRUCTURAL
No. 41693
REGISTERED PROFESSIONAL ENGINEER
5/21/2021

Issued For:

BID DOCUMENTS

Scale: 12" = 1'-0"

Key Plan:

NORTH

Date:	5/21/2021
Drawn By:	EAS
Reviewed By:	QS
Approved By:	NMS
W&S Project No.:	2200740
W&S File No.:	TBD

Drawing Title:

GENERAL NOTES I

Sheet Number:

S001

9.0 - DESIGN LOADS:

9.01 GENERAL DESIGN REQUIREMENTS (IBC 2015 WITH MSBC 9TH EDITION AMENDMENT)
(A) RISK CATEGORY IV (ASCE 7-10, TABLE 1-1)
(B) MUNICIPALITY BLACKSTONE, MA (780 CMR, TABLE 1604.11)

9.02 DESIGN LOADS TO BE VERIFIED BY PRE-ENGINEERED METAL BUILDING DESIGNER.

9.03 FLOOR DESIGN LOADING CRITERIA LOADS (IBC 2015, SECTION 1607)

OCCUPANCY / USE	SUPERIMPOSED DEAD LOAD [a]	LIVE LOADS	
		UNIFORM	CONCENTRATED
OFFICE + PARTITIONS	20 psf	80 psf	2000 lbs
LOBBIES, 1st FLOOR CORRIDORS, CONFERENCE	20 psf	100 psf	2000 lbs
WATER FILTERS AND EQUIPMENT	ACTUAL WEIGHT OF EQUIPMENT	100 psf	-
ROOF	23 psf [b]	20 psf [c]	-
MEZZANINE	20 psf	250 psf	3000 lbs
MECHANICAL ROOMS	20 psf	150 psf	-
STAIRS AND EXITS	5 psf	100 psf	300 lbs [d]
MAINTENANCE CATWALKS	5 psf	40 psf	300 lbs [d]
HANDRAIL AND GUARDRAIL SYSTEMS	-	50 lb/ft [e]	200 lbs [f]
INTERMEDIATE RAILS & PANEL FILLERS	-	50 lb/ft [e]	-

NOTE(S):

(a) SUPERIMPOSED DEAD LOADS ARE APPLIED IN ADDITION TO FRAMING AND SLAB SELF-WEIGHTS.
(b) PRE-ENGINEERED METAL BUILDING COLLATERAL LOAD AND 8PSF ALLOWANCE FOR FUTURE SOLAR PANEL SYSTEM IN ADDITION TO WEIGHT OF FRAMING AND ROOFING.
(c) ROOF LIVE LOAD. ALSO REFER TO SNOW LOAD REQUIREMENTS IN 9.04.
(d) NOT CONCURRENT WITH THE UNIFORM LOAD. THE CONCENTRATED LOAD ON STAIR TREADS SHALL BE APPLIED ON AN AREA OF 2 INCHES BY 2 INCHES.
(e) APPLIED IN ANY DIRECTION ALONG THE HANDRAIL OR TOP RAIL TO PRODUCE THE MAXIMUM EFFECTS. UNIFORM AND CONCENTRATED LOADS ARE NOT APPLIED CONCURRENTLY.
(f) APPLIED NORMAL TO THE SURFACE ON AN AREA NOT TO EXCEED 12"x12" (NOT CONCURRENT WITH TOP RAIL LOADS).
(g) VEHICLE LOADING PER IBC 2015 1607.7.

9.04 ROOF SNOW LOAD (IBC 2015, SECTION 1608)

(A) GROUND SNOW LOAD, Pg 40 PSF (780 CMR, TABLE 1604.11)
(B) MINIMUM FLAT ROOF SNOW LOAD, Pf 35 PSF (MA, STATE BUILDING CODE CHAPTER 16 (AMENDED)
(C) SNOW EXPOSURE FACTOR, Ce 1.1 (ASCE 7-10, TABLE 7-2)
(D) THERMAL FACTOR, Ct 1.0, 1.1 @ BREEZEWAY (ASCE 7-10, TABLE 7-3)
(E) SNOW LOAD IMPORTANCE FACTOR, IS 1.2 (ASCE 7-10, TABLE 7-4)
(F) ROOF SLOPE FACTOR, Cs 1.0 (ASCE 7-10, FIGURE 7-2)
(G) * ADJUST FOR SNOW DRIFT AND UNBALANCED SNOW LOADING (MSBC 780 CMR)
(H) BREEZEWAY ROOF SNOW LOAD INCLUDING SNOW DRIFT 74 PSF

9.05 WIND LOADS (IBC 2015, SECTION 1609)

(A) BASIC WIND SPEED, V (3-SECOND GUST WIND SPEED) 140 MPH (780 CMR, TABLE)
(B) BUILDING ENCLOSURE CLASSIFICATION ENCLOSED (ASCE 7-10, SEC. 6.2)
(C) WIND EXPOSURE CATEGORY C (ASCE 7-10, SEC. 6.5.6.3)
(D) DESIGN BUILDING DIMENSIONS
(E) COMPONENTS AND CLADDING (ASCE 7-10, SEE TABLE)
(1) ANALYSIS PROCEDURE LOW RISE BUILDINGS (ASCE 7-10)
(a) WIND DIRECTIONALITY FACTOR, Kd 0.85 (ASCE 7-10, TABLE 26.6-1)
(b) TOPOGRAPHIC FACTOR, Kzt 1.0 (ASCE 7-10, SECTION 26.8)
(c) VELOCITY PRESSURE COEFFICIENT, Kz 0.94 (ASCE 7-10, TABLE 27.3-1)
(d) INTERNAL PRESSURE COEFFICIENT, GCpi +/-0.18 (ASCE 7-10, TABLE 26.11-1)

9.06 EARTHQUAKE LOADS (IBC 2015, SECTION 1613)
(A) SITE CLASS D (GEOTECH REPORT)
(B) SPECTRAL RESPONSE ACCELERATIONS
(1) Ss 0.177 (780 CMR, TABLE 1604.11)
(2) S1 0.063 (780 CMR, TABLE 1604.11)
(C) SPECTRAL RESPONSE COEFFICIENTS
(1) Sds 0.189 (ASCE 7-10, SEC. 11.4.3)
(2) Sd1 0.094 (ASCE 7-10, SEC. 11.4.3)
(D) SEISMIC DESIGN CATEGORY C (ASCE 7-10, SEC 11.6-1)
(E) SEISMIC IMPORTANCE FACTOR, Ie 1.5 (ASCE 7-10, TABLE 11.5-1)
(F) SEISMIC FORCE RESISTING SYSTEM: (780 CMR, TABLE 12.2-1)
(1) STEEL SYSTEM NOT SPECIFICALLY DETAILED FOR SEISMIC RESISTANCE
(a) RESPONSE MODIFICATION COEFFICIENT, R _ 3
(b) SYSTEM OVERSTRENGTH PARAMETER,Ωo _ 3
(c) DEFLECTION AMPLIFICATION FACTOR, Cd _ 3

(G) ANALYSIS PROCEDURE EQUIVALENT LATERAL FORCE ANALYSIS (ASCE 7-10, SEC. 12.8)

9.07 CRANE LOADS
(A) CRANE CAPACITY 2 TONS
(B) MAX. LIFT FROM FLOOR 10 FT

10.0 - BUILDING DEFLECTION LIMITS

BUILDING DEFLECTION LIMITS			
CONSTRUCTION	LIVE	SNOW OR WIND (c)	DEAD+LIVE
ROOF MEMBER (d) SUPPORTING PLASTER CEILING SUPPORTING NON PLASTER CEILING	(a) 1/360 1/240 1/180	(a) 1/360 1/240 1/180	 1/360 1/240 1/180
FLOOR MEMBERS	(b) 1/360	-	 1/240
EXTERIOR WALLS AND INTERIOR PARTITIONS WITH MASONRY VENEER ALL OTHER CASES	-	 1/600 1/240	-

(A) TOTAL ROOF SNOW LOAD DEFLECTION SHALL NOT EXCEED 1 1/4".
(B) TOTAL FLOOR LIVE LOAD DEFLECTION SHALL NOT EXCEED 1".
(C) WIND DEFLECTIONS MAY BE BASED ON A 10-YEAR WIND.
(D) DEFLECTIONS OF MEMBERS SUPPORTING CRANES SHALL MEET DEFLECTION CRITERIA REQUIRED BY THE CRANE MANUFACTURER OR AS SPECIFIED IN THE ABOVE, WHICHEVER IS MORE STRINGENT.

1 BUILDING DEFLECTION LIMITS
SCALE: 1" = 1'-0"

C:\Users\shaw.erica\OneDrive - WESTON & SAMPSON ENGINEERS, Inc\Documents\2200740_Blackstone WTP_STRUCTURAL_Rvt2020_Shaw.Erica.rvt
6/1/2021 9:03:30 AM

Project:
TOWN OF BLACKSTONE,
MASSACHUSETTS
DEPARTMENT OF PUBLIC WORKS

BLACKSTONE WATER TREATMENT PLANT

53 ELM STREET, BLACKSTONE, MASSACHUSETTS, 01504

Weston & Sampson
Weston & Sampson Engineers, Inc.
55 Walkers Brook Drive, Suite 100
Reading, MA 01867
978.532.1900 800.SAMPSON
www.westonandsampson.com

Consultants:

Revisions:

No.	Date	Description

COA:

©COPYRIGHT ©2021 BY WESTON & SAMPSON
THIS DRAWING HAS BEEN PREPARED FOR THE EXCLUSIVE USE OF THE CLIENT & PROJECT NAME LISTED ON THIS DRAWING ONLY.

REPRODUCTION, RELEASE OF UTILIZATION OF THE DRAWING CONTENT BY OTHER CLIENTS / FIRMS AND ON OTHER PROJECTS IS PROHIBITED BY LAW.

WESTON & SAMPSON RETAINS THE EXCLUSIVE USE OF THE INTELLECTUAL PROPERTY CONTAINED HEREIN.

Seal:
COMMONWEALTH OF MASSACHUSETTS
NATHAN M. SEIFERT
STRUCTURAL
No. 41693
REGISTERED
PROFESSIONAL ENGINEER
5/21/2021

Issued For:
BID DOCUMENTS

Scale: As indicated

Key Plan:

NORTH

Date:	5/21/2021
Drawn By:	EAS
Reviewed By:	QS
Approved By:	NMS
W&S Project No.:	2200740
W&S File No.:	TBD

Drawing Title:
GENERAL NOTES II

Sheet Number:
S002

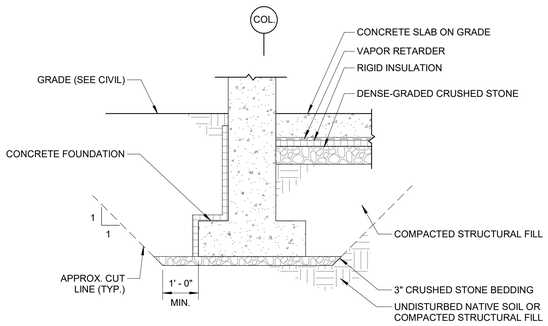

FOUNDATION NOTE(S):

1. UNDOCUMENTED FILL AND LOOSE OR DISTURBED SOILS SHALL BE REMOVED FROM ALL FOUNDATION AREAS. THE CONTRACTOR SHALL CONTACT THE ENGINEER PRIOR TO FOUNDATION CONSTRUCTION TO OBSERVE ALL FOUNDATION SUBGRADES.
2. 3-INCHES OF CRUSHED STONE SHALL BE PLACED AND COMPACTED AT THE BASE OF FOOTING EXCAVATIONS.
3. THE CONTRACTOR IS RESPONSIBLE FOR SUBGRADE PROTECTION.

SLAB NOTE(S):

1. A MINIMUM OF 12-INCHES OF DENSE-GRADED CRUSHED STONE FOR SUBBASE CONFORMING TO MassDOT M2.01.7 SHALL BE PLACED BELOW SLABS. THE CONTRACTOR SHALL CONTACT THE ENGINEER PRIOR TO PLACEMENT OF UNDERSLAB STONE FOR SUBGRADE EVALUATION. UNDERSLAB STONE SHALL BE COMPACTED IN ACCORDANCE WITH EARTHWORK SPECIFICATION.
2. IF UNDERSLAB STONE IS TRAPPING WATER, THE WATER SHALL BE REMOVED PRIOR TO SLAB PLACEMENT.

1 TYPICAL CUT/FILL DETAIL

SCALE: 1/2" = 1'-0"

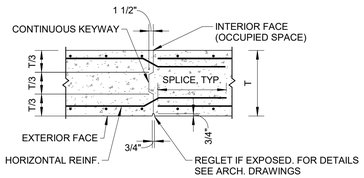

2 VERTICAL CONSTRUCTION JOINT (WALL)

SCALE: 1/2" = 1'-0"

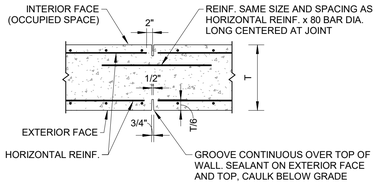

NOTE: NOT TO BE USED ON LOWER LEVEL AND TANK WALLS.

3 VERTICAL CONTROL JOINT (WALL)

SCALE: 1/2" = 1'-0"

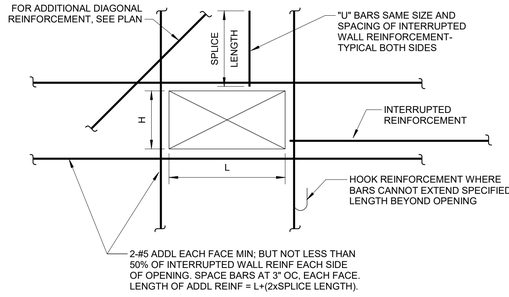

NOTES:

1. WALL OPENINGS SHALL BE COORDINATED AND DETAILED ON THE REINFORCEMENT SHOP DRAWINGS.

4 REINFORCMENT AT OPENINGS IN REINFORCED CONCRETE WALLS

SCALE: 3/4" = 1'-0"

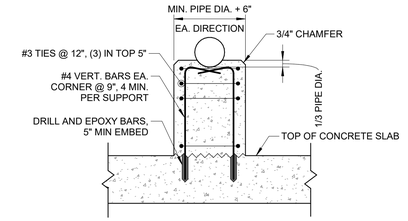

5 CONCRETE PIPE CRADLE

SCALE: 1" = 1'-0"

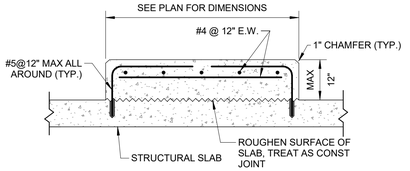

THE EXACT SIZE, SHAPE AND LOCATION OF EQUIPMENT (HOUSEKEEPING) PAD(S) SHALL BE DETERMINED BY THE CONTRACTOR AFTER APPROVAL OF SHOP DRAWINGS FOR EQUIPMENT. ANCHOR BOLTS WHERE REQUIRED SHALL BE SIZED AND LOCATED ACCORDING TO MANUFACTURER'S REQUIREMENTS.

6 CONCRETE EQUIPMENT PAD

SCALE: 3/4" = 1'-0"

TENSION DEVELOPMENT & SPLICE LENGTHS FOR BARS, F'c = 4,500 PSI (PER ACI 12.2.2)		
BAR SIZE	TOP BARS (IN.)	OTHER BARS (IN.)
#3	23	18
#4	31	24
#5	38	30
#6	46	35
#7	67	51
#8	76	59
#9	85	66
#10	95	73
#11	104	80

7 MINIMUM SPLICE DEVELOPEMENT LENGTHS

SCALE: 1/2" = 1'-0"

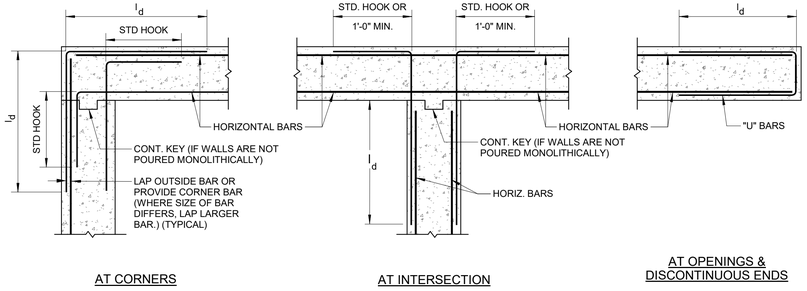

NOTE(S):

1. VERTICAL BARS NOT SHOWN FOR CLARITY. (TYP.)
2. FOR LENGTH OF ld, REFER TO SPLICE AND DEVELOPMENT LENGTH TABLE.

8 HORIZONTAL WALL REINFORCING PLAN

SCALE: 1/2" = 1'-0"

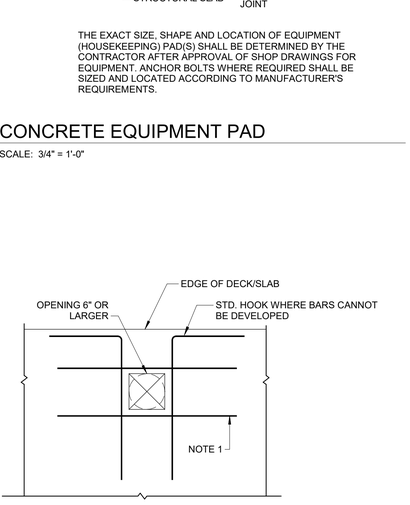

NOTE(S):

1. #5 ADDL EACH FACE MIN; BUT NOT LESS THAN 50% OF INTERRUPTED WALL REINF EACH SIDE OF OPENING. SPACE BARS AT 3" OC, EACH FACE. LENGTH OF ADDL REINF = L OR H+(2XSPLICE LENGTH).
2. FOR MINIMUM SPLICE LENGTH. SEE TABLE

9 SUPPLEMENTAL SLAB REINFORCING

SCALE: 1/2" = 1'-0"

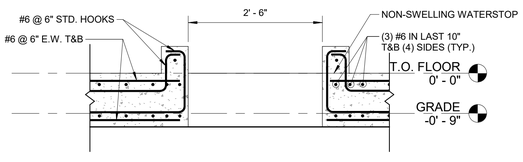

10 HATCH SECTION

SCALE: 3/4" = 1'-0"

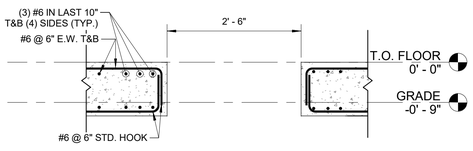

11 HATCH W/O CURB SECTION

SCALE: 3/4" = 1'-0"

Project:
TOWN OF BLACKSTONE, MASSACHUSETTS
DEPARTMENT OF PUBLIC WORKS

BLACKSTONE WATER TREATMENT PLANT

53 ELM STREET, BLACKSTONE, MASSACHUSETTS, 01504

Weston & Sampson
Weston & Sampson Engineers, Inc.
55 Walkers Brook Drive, Suite 100
Reading, MA 01867
978.532.1900 800.SAMPSON
www.westonandsampson.com

Consultants:

Revisions:

No.	Date	Description

COA:

"COPYRIGHT ©2021 BY WESTON & SAMPSON
THIS DRAWING HAS BEEN PREPARED FOR THE EXCLUSIVE USE OF THE CLIENT & PROJECT NAME LISTED ON THIS DRAWING ONLY.

REPRODUCTION, RELEASE OF UTILIZATION OF THE DRAWING CONTENT BY OTHER CLIENTS / FIRMS AND ON OTHER PROJECTS IS PROHIBITED BY LAW.

WESTON & SAMPSON RETAINS THE EXCLUSIVE USE OF THE INTELLECTUAL PROPERTY CONTAINED HEREIN.

Seal:

COMMONWEALTH OF MASSACHUSETTS
NATHAN M. SEIFERT
STRUCTURAL
No. 41693
REGISTERED PROFESSIONAL ENGINEER
5/21/2021

Issued For:
BID DOCUMENTS

Scale: As indicated

Key Plan:

NORTH

Date:	5/21/2021
Drawn By:	EAS
Reviewed By:	QS
Approved By:	NMS
W&S Project No.:	2200740
W&S File No.:	TBD

Drawing Title:
TYPICAL DETAILS

Sheet Number:
S003

C:\Users\shaw.erica\OneDrive - WESTON & SAMPSON ENGINEERS, Inc\Documents\2200740_Blackstone WTP_STRUCTURAL_Rvt\2020_Shaw Erica.rvt
6/1/2021 9:03:32 AM

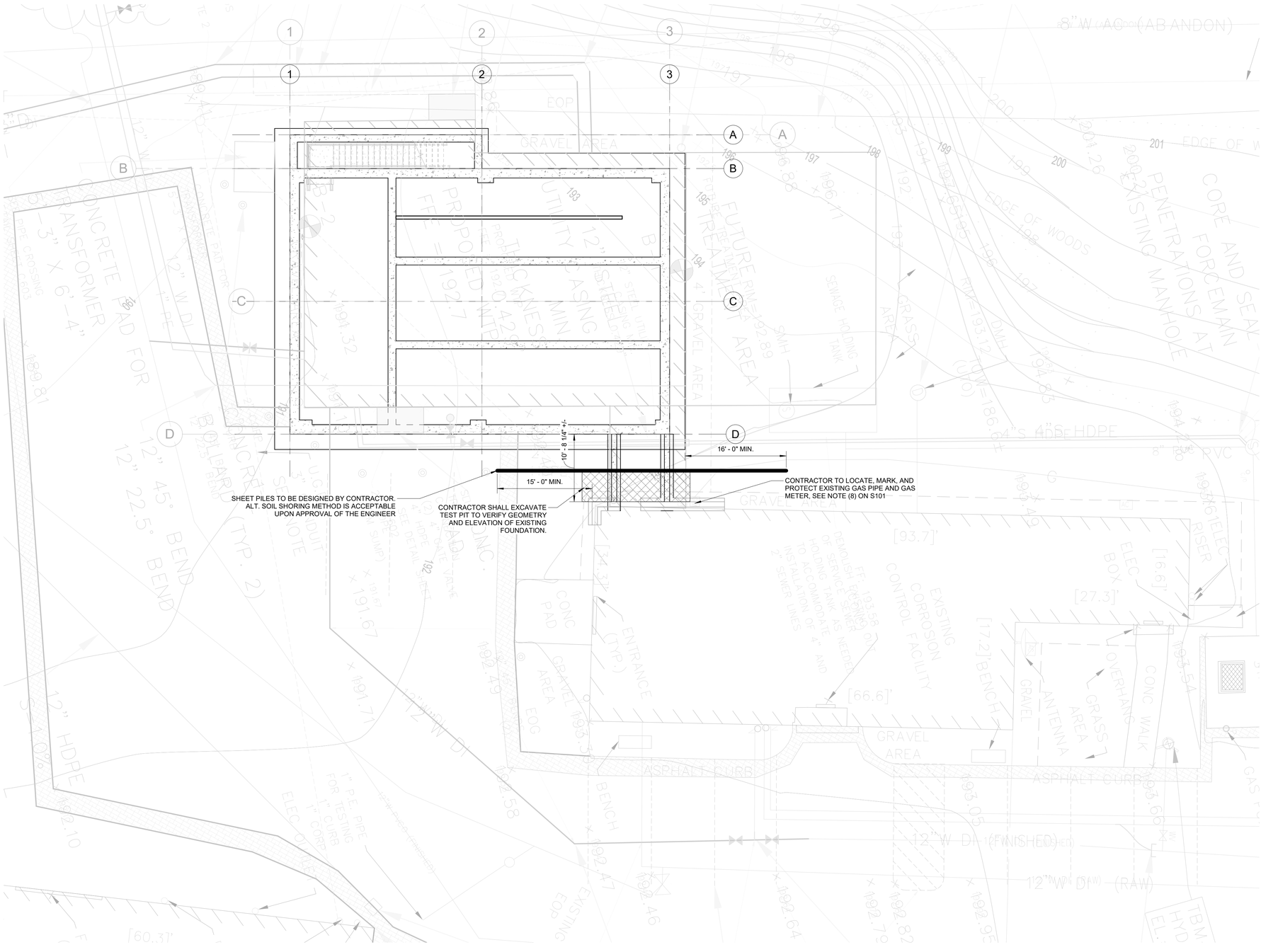

1 EXCAVATION PLAN

SCALE: 1/8" = 1'-0"

Project:

TOWN OF BLACKSTONE, MASSACHUSETTS
DEPARTMENT OF PUBLIC WORKS

BLACKSTONE WATER TREATMENT PLANT

53 ELM STREET, BLACKSTONE, MASSACHUSETTS, 01504

Weston & Sampson

Weston & Sampson Engineers, Inc.
55 Walkers Brook Drive, Suite 100
Reading, MA 01867
978.532.1900 800.SAMPSON

www.westonandsampson.com

Consultants:

Revisions:

No.	Date	Description

COA:

'COPYRIGHT ©2021 BY WESTON & SAMPSON
THIS DRAWING HAS BEEN PREPARED FOR THE EXCLUSIVE USE OF THE CLIENT & PROJECT NAME LISTED ON THIS DRAWING ONLY.

REPRODUCTION, RELEASE OF UTILIZATION OF THE DRAWING CONTENT BY OTHER CLIENTS / FIRMS AND ON OTHER PROJECTS IS PROHIBITED BY LAW.

WESTON & SAMPSON RETAINS THE EXCLUSIVE USE OF THE INTELLECTUAL PROPERTY CONTAINED HEREIN.

Seal:

COMMONWEALTH OF MASSACHUSETTS
NATHAN M. SEIFERT
STRUCTURAL
No. 41693
REGISTERED PROFESSIONAL ENGINEER
5/21/2021

Issued For:

BID DOCUMENTS

Scale: 1/8" = 1'-0"

Key Plan:

NORTH

Date:	5/21/2021
Drawn By:	EAS
Reviewed By:	QS
Approved By:	NMS
W&S Project No.:	2200740
W&S File No.:	TBD

Drawing Title:

EXCAVATION PLAN

Sheet Number:

S100

6/1/2021 9:06:01 AM C:\Users\shaw.erica\OneDrive - WESTON & SAMPSON ENGINEERS, Inc\Documents\2200740_Blackstone WTP_STRUCTURAL_Rvt2020_Shaw.Erica.rvt

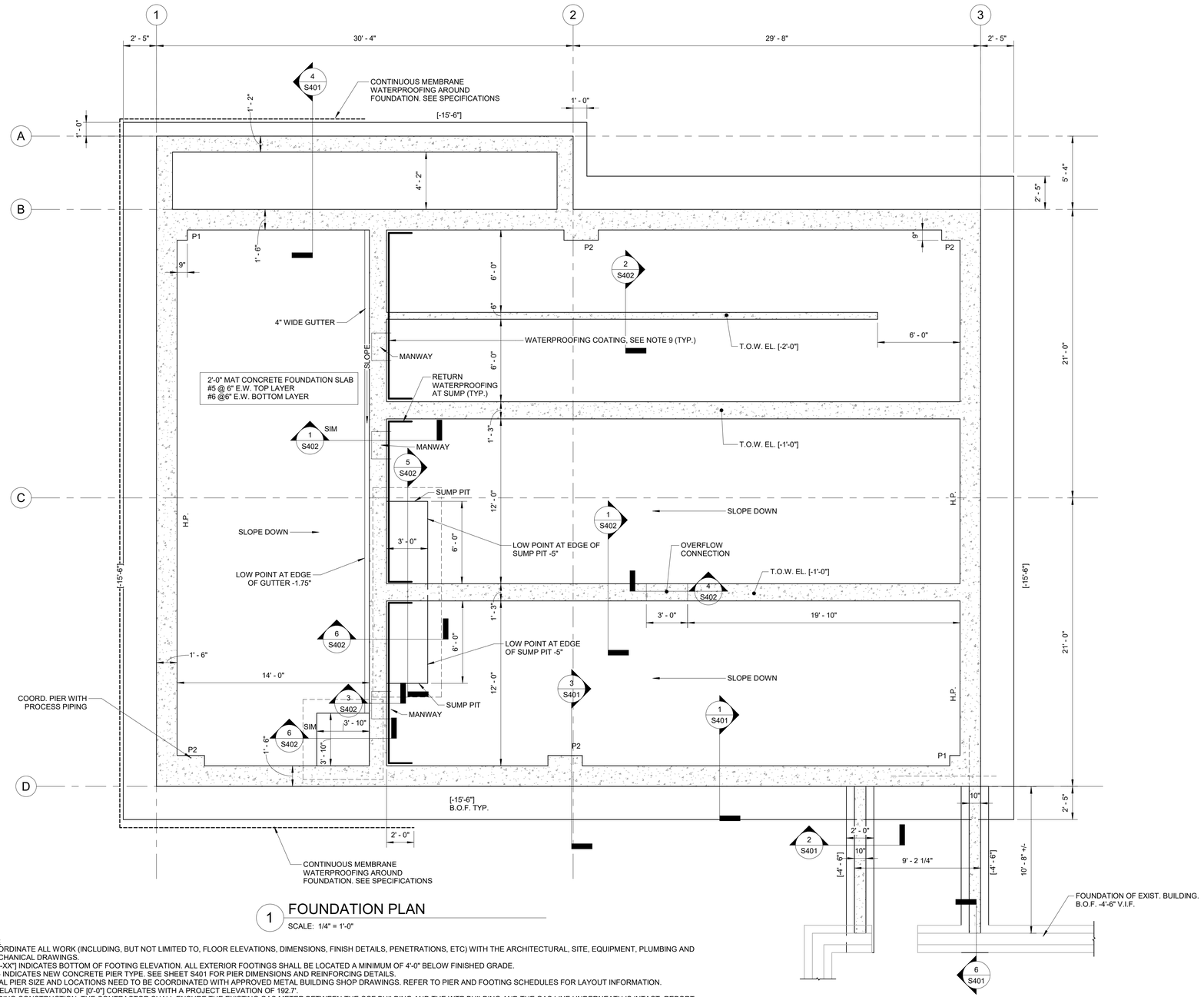

1 FOUNDATION PLAN

SCALE: 1/4" = 1'-0"

NOTES:

1. COORDINATE ALL WORK (INCLUDING, BUT NOT LIMITED TO, FLOOR ELEVATIONS, DIMENSIONS, FINISH DETAILS, PENETRATIONS, ETC) WITH THE ARCHITECTURAL, SITE, EQUIPMENT, PLUMBING AND MECHANICAL DRAWINGS.
2. [XX'-XX"] INDICATES BOTTOM OF FOOTING ELEVATION. ALL EXTERIOR FOOTINGS SHALL BE LOCATED A MINIMUM OF 4'-0" BELOW FINISHED GRADE.
3. P# - INDICATES NEW CONCRETE PIER TYPE. SEE SHEET S401 FOR PIER DIMENSIONS AND REINFORCING DETAILS.
4. FINAL PIER SIZE AND LOCATIONS NEED TO BE COORDINATED WITH APPROVED METAL BUILDING SHOP DRAWINGS. REFER TO PIER AND FOOTING SCHEDULES FOR LAYOUT INFORMATION.
5. A RELATIVE ELEVATION OF [0'-0"] CORRELATES WITH A PROJECT ELEVATION OF 192.7'.
6. DURING CONSTRUCTION, THE CONTRACTOR SHALL ENSURE THE EXISTING GAS METER BETWEEN THE CCF BUILDING AND THE WTP BUILDING AND THE GAS LINE UNDERNEATH IS INTACT. REPORT ANY CONFLICT CONDITION TO THE ENGINEER IN WRITING BEFORE ANY CHANGE.
7. REFER TO MECHANICAL AND PROCESS DRAWINGS FOR PIPE INFORMATION AND LOCATIONS.
8. BEFORE DAMPROOFING AND BACKFILLING, ALL TANKS AND OTHER LIQUID CONTAINING STRUCTURES SHALL BE LEAD TESTED IN ACCORDANCE WITH SPECIFICATION SECTION 03301.
9. PROVIDE VAPOR RETARDER UNDER SLAB OF PIPE GALLERY AND UNDER SLAB-ON-GRADE (UNEXCAVATED.) PROVIDE DAMPROOFING AT WALLS ADJACENT TO PIPE GALLERY, BUT NOT INSIDE TANKS. REFER TO ARCH. DWGS.
10. WATER LEAKAGE TESTS SHALL NOT BE PERFORMED UNTIL THE CONCRETE HAS CURED FOR A MINIMUM OF 28 DAYS AND HAS ATTAINED THE REQUIRED DESIGN STRENGTH.
11. WATER LEAKAGE TESTS MAY BE PERFORMED PRIOR TO CONSTRUCTION OF THE TANK ROOF SLAB.
12. APPLY WATERPROOFING COATING PER SPECIFICATION 09 96 00. APPLY AT ALL TANK WALLS ADJACENT TO PIPE GALLERY. RETURN COATING AT FLOORS, WALLS, AND SUMP PITS.

Project:

TOWN OF BLACKSTONE, MASSACHUSETTS
DEPARTMENT OF PUBLIC WORKS

BLACKSTONE WATER TREATMENT PLANT

53 ELM STREET, BLACKSTONE, MASSACHUSETTS, 01504

Weston & Sampson

Weston & Sampson Engineers, Inc.
55 Walkers Brook Drive, Suite 100
Reading, MA 01867
978.532.1900 800.SAMPSON

www.westonandsampson.com

Consultants:

Revisions:

No.	Date	Description

COA:

"COPYRIGHT ©2021 BY WESTON & SAMPSON
THIS DRAWING HAS BEEN PREPARED FOR THE EXCLUSIVE USE OF THE CLIENT & PROJECT NAME LISTED ON THIS DRAWING ONLY.

REPRODUCTION, RELEASE OF UTILIZATION OF THE DRAWING CONTENT BY OTHER CLIENTS / FIRMS AND ON OTHER PROJECTS IS PROHIBITED BY LAW.

WESTON & SAMPSON RETAINS THE EXCLUSIVE USE OF THE INTELLECTUAL PROPERTY CONTAINED HEREIN.

Seal:

COMMONWEALTH OF MASSACHUSETTS
NATHAN M. SEIFERT
STRUCTURAL
No. 41693
REGISTERED PROFESSIONAL ENGINEER
5/21/2021

Issued For:

BID DOCUMENTS

Scale: 1/4" = 1'-0"

Key Plan:

NORTH

Date:	5/21/2021
Drawn By:	EAS
Reviewed By:	QS
Approved By:	NMS
W&S Project No.:	2200740
W&S File No.:	TBD

Drawing Title:

FOUNDATION PLAN

Sheet Number:

S101

6/1/2021 9:03:34 AM C:\Users\shaw.erica\OneDrive - WESTON & SAMPSON ENGINEERS, Inc\Documents\2200740_Blackstone WTP_STRUCTURAL_Rv2020_Shaw.Erica.rvt

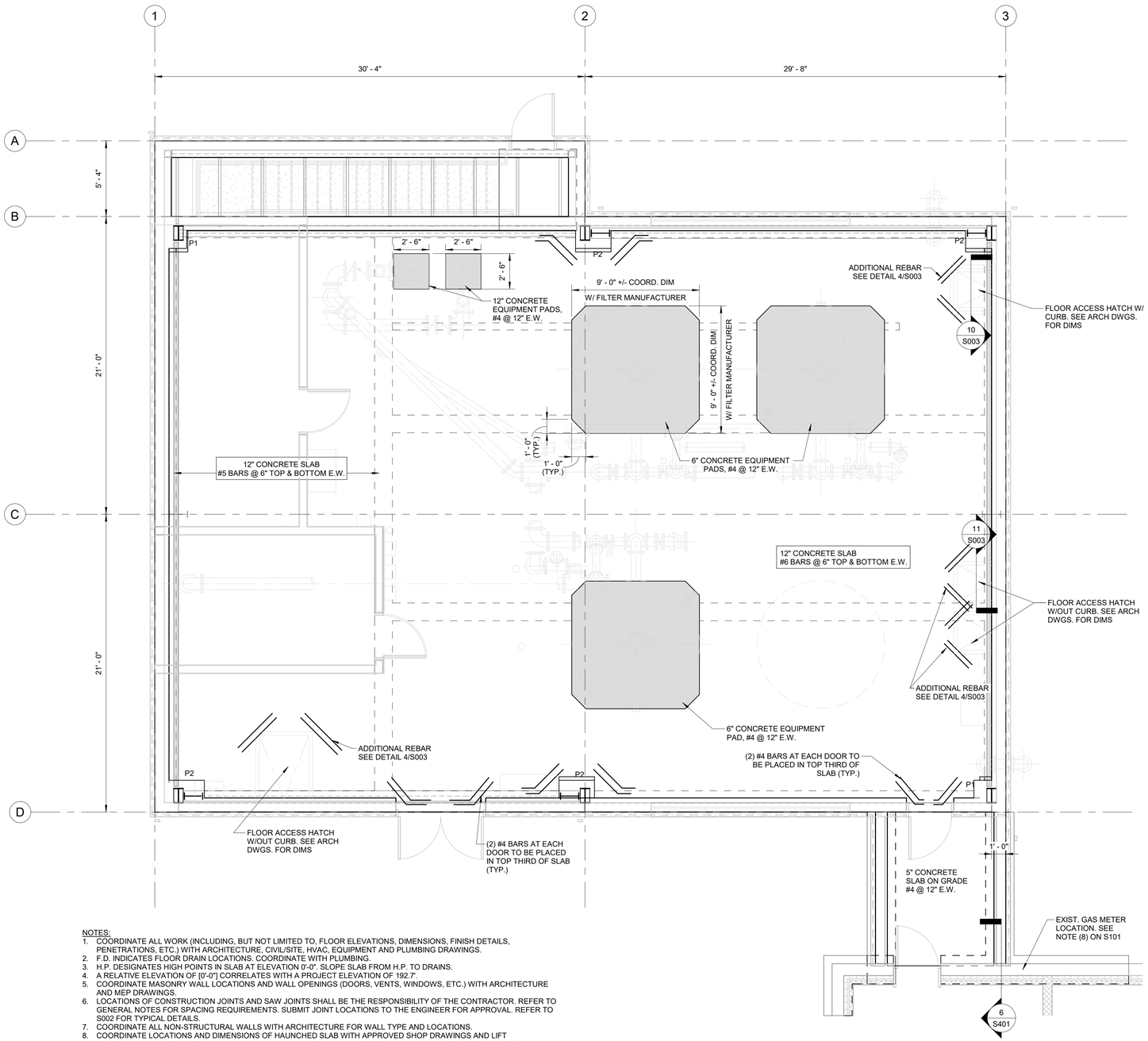

NOTES:

1. COORDINATE ALL WORK (INCLUDING, BUT NOT LIMITED TO, FLOOR ELEVATIONS, DIMENSIONS, FINISH DETAILS, PENETRATIONS, ETC.) WITH ARCHITECTURE, CIVIL/SITE, HVAC, EQUIPMENT AND PLUMBING DRAWINGS.
2. F.D. INDICATES FLOOR DRAIN LOCATIONS. COORDINATE WITH PLUMBING.
3. H.P. DESIGNATES HIGH POINTS IN SLAB AT ELEVATION 0'-0". SLOPE SLAB FROM H.P. TO DRAINS.
4. A RELATIVE ELEVATION OF [0'-0"] CORRELATES WITH A PROJECT ELEVATION OF 192.7'.
5. COORDINATE MASONRY WALL LOCATIONS AND WALL OPENINGS (DOORS, VENTS, WINDOWS, ETC.) WITH ARCHITECTURE AND MEP DRAWINGS.
6. LOCATIONS OF CONSTRUCTION JOINTS AND SAW JOINTS SHALL BE THE RESPONSIBILITY OF THE CONTRACTOR. REFER TO GENERAL NOTES FOR SPACING REQUIREMENTS. SUBMIT JOINT LOCATIONS TO THE ENGINEER FOR APPROVAL. REFER TO S002 FOR TYPICAL DETAILS.
7. COORDINATE ALL NON-STRUCTURAL WALLS WITH ARCHITECTURE FOR WALL TYPE AND LOCATIONS.
8. COORDINATE LOCATIONS AND DIMENSIONS OF HAUNCHED SLAB WITH APPROVED SHOP DRAWINGS AND LIFT MANUFACTURER. HAUNCH SLAB TO 12" DEPTH. PROVIDE #4 @ 6" BOTH WAYS AT BOTTOM OF SLAB IN THESE LOCATIONS. SLAB REINFORCEMENT TO CONTINUE THROUGH THIS SECTION.
9. COORDINATE WITH PRE-ENGINEERED METAL BUILDING DESIGN FOR ANCHOR BOLT DETAILS.

1 SLAB PLAN

SCALE: 1/4" = 1'-0"

Project:

TOWN OF BLACKSTONE,
MASSACHUSETTS
DEPARTMENT OF PUBLIC
WORKS

BLACKSTONE WATER
TREATMENT PLANT

53 ELM STREET, BLACKSTONE,
MASSACHUSETTS, 01504

Weston & Sampson

Weston & Sampson Engineers, Inc.
55 Walkers Brook Drive, Suite 100
Reading, MA 01867
978.532.1900 800.SAMPSON

www.westonandsampson.com

Consultants:

Revisions:

No.	Date	Description

COA:

"COPYRIGHT ©2021 BY WESTON & SAMPSON
THIS DRAWING HAS BEEN PREPARED FOR THE EXCLUSIVE USE OF THE CLIENT & PROJECT NAME LISTED ON THIS DRAWING ONLY.

REPRODUCTION, RELEASE OF UTILIZATION OF THE DRAWING CONTENT BY OTHER CLIENTS / FIRMS AND ON OTHER PROJECTS IS PROHIBITED BY LAW.

WESTON & SAMPSON RETAINS THE EXCLUSIVE USE OF THE INTELLECTUAL PROPERTY CONTAINED HEREIN.

Seal:

COMMONWEALTH OF MASSACHUSETTS
NATHAN M. SEIFERT
STRUCTURAL
No. 41693
REGISTERED PROFESSIONAL ENGINEER
5/21/2021

Issued For:

BID DOCUMENTS

Scale: 1/4" = 1'-0"

Key Plan:

NORTH

Date:	5/21/2021
Drawn By:	EAS
Reviewed By:	QS
Approved By:	NMS
W&S Project No.:	2200740
W&S File No.:	TBD

Drawing Title:

SLAB PLAN

Sheet Number:

S111

6/1/2021 9:03:34 AM C:\Users\shaw.erica\OneDrive - WESTON & SAMPSON ENGINEERS, Inc\Documents\2200740_Blackstone WTP_STRUCTURAL_Rvt2020_Shaw.Erica.rvt

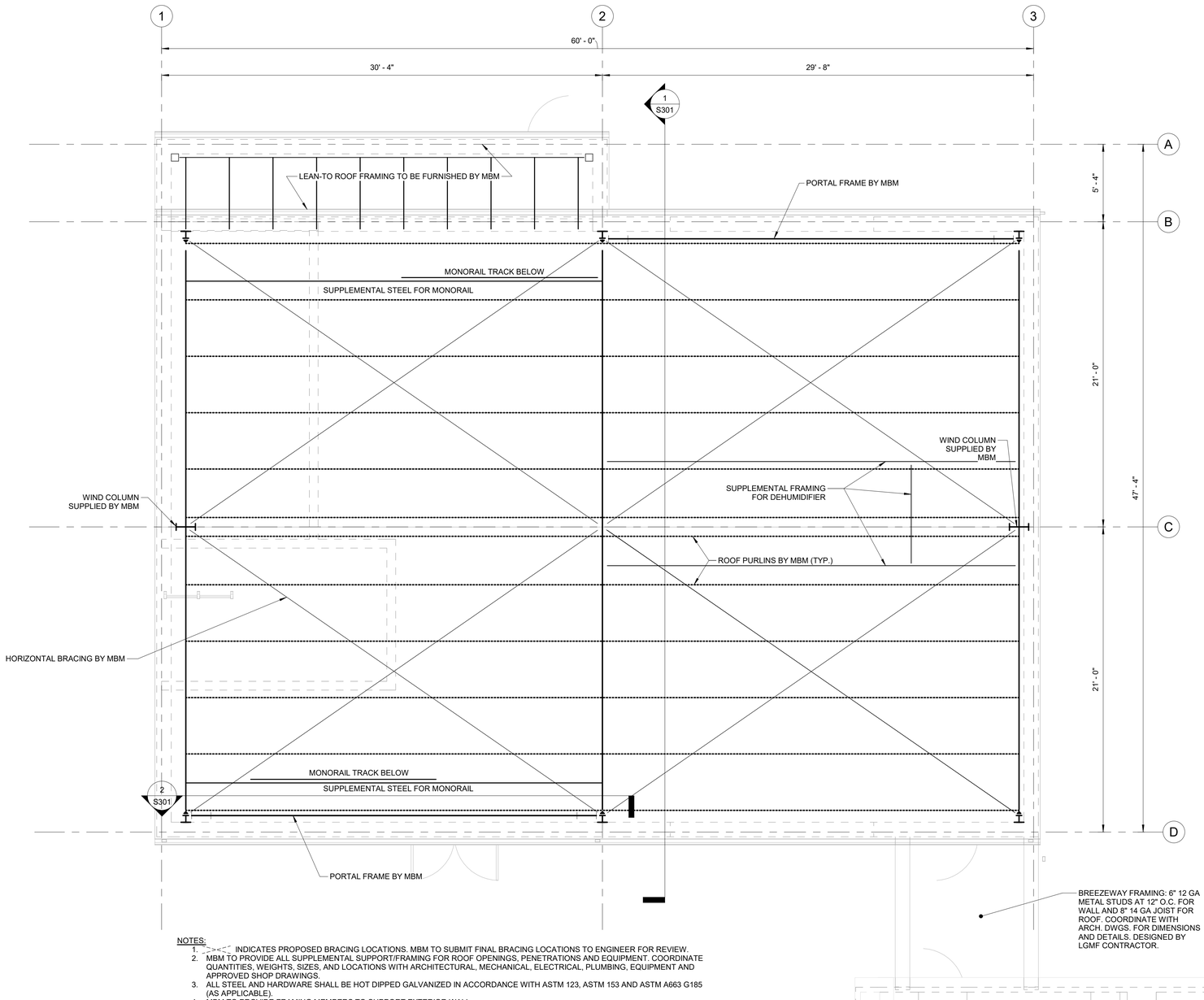

NOTES:

1. - - - - - INDICATES PROPOSED BRACING LOCATIONS. MBM TO SUBMIT FINAL BRACING LOCATIONS TO ENGINEER FOR REVIEW.
2. MBM TO PROVIDE ALL SUPPLEMENTAL SUPPORT/FRAMING FOR ROOF OPENINGS, PENETRATIONS AND EQUIPMENT. COORDINATE QUANTITIES, WEIGHTS, SIZES, AND LOCATIONS WITH ARCHITECTURAL, MECHANICAL, ELECTRICAL, PLUMBING, EQUIPMENT AND APPROVED SHOP DRAWINGS.
3. ALL STEEL AND HARDWARE SHALL BE HOT DIPPED GALVANIZED IN ACCORDANCE WITH ASTM 123, ASTM 153 AND ASTM A663 G185 (AS APPLICABLE).
4. MBM TO PROVIDE FRAMING MEMBERS TO SUPPORT EXTERIOR WALL.
5. ROOF PURLINS ARE SHOWN IN SCHEMATIC ONLY. QUANTITY, SPACING, LOCATIONS AND DIMENSIONS OF ROOF PURLINS SHALL BE DESIGNED AND FURNISHED BY METAL BUILDING MANUFACTURER.

1 ROOF FRAMING PLAN

SCALE: 1/4" = 1'-0"

6/1/2021 9:17:35 AM C:\Users\shaw.erica\OneDrive - WESTON & SAMPSON ENGINEERS, Inc\Documents\2200740_Blackstone WTP_STRUCTURAL_Rvt2020_Shaw.Erica.rvt

Project:

TOWN OF BLACKSTONE, MASSACHUSETTS
DEPARTMENT OF PUBLIC WORKS

BLACKSTONE WATER TREATMENT PLANT

53 ELM STREET, BLACKSTONE, MASSACHUSETTS, 01504

Weston & Sampson Engineers, Inc.
55 Walkers Brook Drive, Suite 100
Reading, MA 01867
978.532.1900 800.SAMPSON
www.westonandsampson.com

Consultants:

Revisions:

No.	Date	Description

COA:

"COPYRIGHT ©2021 BY WESTON & SAMPSON
THIS DRAWING HAS BEEN PREPARED FOR THE EXCLUSIVE USE OF THE CLIENT & PROJECT NAME LISTED ON THIS DRAWING ONLY.

REPRODUCTION, RELEASE OF UTILIZATION OF THE DRAWING CONTENT BY OTHER CLIENTS / FIRMS AND ON OTHER PROJECTS IS PROHIBITED BY LAW.

WESTON & SAMPSON RETAINS THE EXCLUSIVE USE OF THE INTELLECTUAL PROPERTY CONTAINED HEREIN.

Seal:

COMMONWEALTH OF MASSACHUSETTS
NATHAN M. SEIFERT
STRUCTURAL
No. 41693
REGISTERED PROFESSIONAL ENGINEER
5/21/2021

Issued For:

BID DOCUMENTS

Scale: 1/4" = 1'-0"

Key Plan:

NORTH

Date:	5/21/2021
Drawn By:	EAS
Reviewed By:	QS
Approved By:	NMS
W&S Project No.:	2200740
W&S File No.:	TBD

Drawing Title:

FRAMING PLAN

Sheet Number:

S121

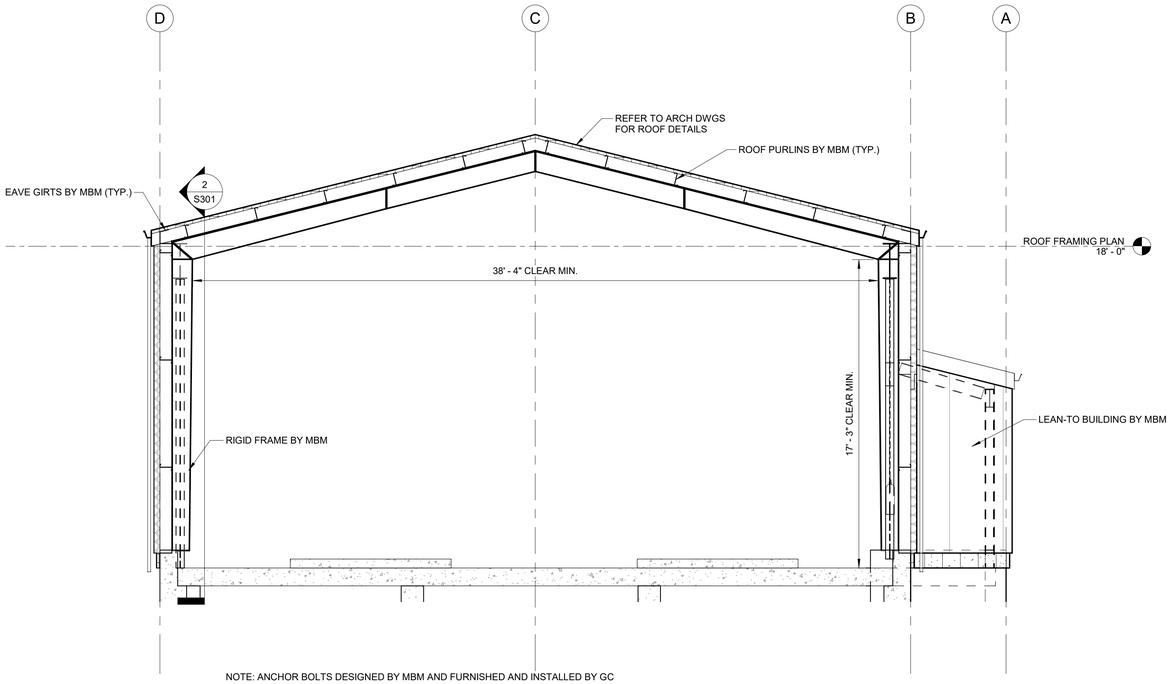

NOTE: ANCHOR BOLTS DESIGNED BY MBM AND FURNISHED AND INSTALLED BY GC

1 TYPICAL FRAME ELEVATION

SCALE: 1/4" = 1'-0"

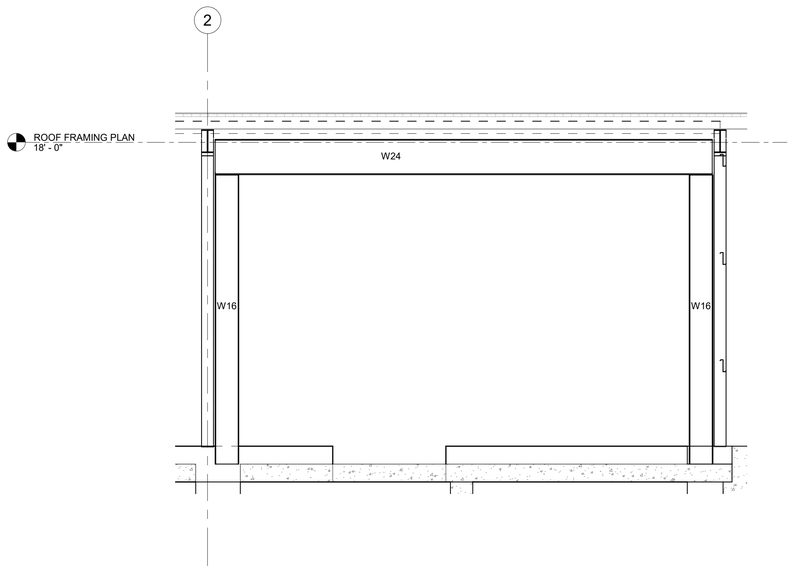

2 TYPICAL PORTAL FRAME

SCALE: 1/4" = 1'-0"

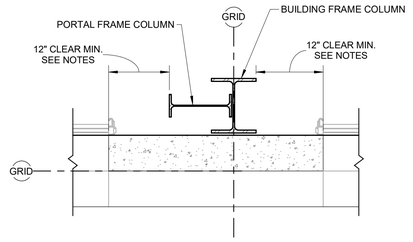

NOTES:
1. PROVIDE MINIMUM CLEARANCES AS SHOWN AT OVERHEAD AND MAN DOORS. CLEARANCES MAY BE REDUCED TO 6 INCHES ADJACENT TO WINDOWS AND TRANSLUCENT PANELS.
2. COORDINATE CLEARANCES WITH ARCHITECTURAL AND EQUIPMENT DRAWINGS.

3 TYPICAL PORTAL FRAME CLEARANCES

SCALE: 3/4" = 1'-0"

Project:

TOWN OF BLACKSTONE,
MASSACHUSETTS
DEPARTMENT OF PUBLIC
WORKS

BLACKSTONE WATER
TREATMENT PLANT

53 ELM STREET, BLACKSTONE,
MASSACHUSETTS, 01504

Weston & Sampson

Weston & Sampson Engineers, Inc.
55 Walkers Brook Drive, Suite 100
Reading, MA 01867
978.532.1900 800.SAMPSON

www.westonandsampson.com

Consultants:

Revisions:

No.	Date	Description

COA:

"COPYRIGHT ©2021 BY WESTON & SAMPSON
THIS DRAWING HAS BEEN PREPARED FOR THE EXCLUSIVE USE OF THE CLIENT & PROJECT NAME LISTED ON THIS DRAWING ONLY.

REPRODUCTION, RELEASE OF UTILIZATION OF THE DRAWING CONTENT BY OTHER CLIENTS / FIRMS AND ON OTHER PROJECTS IS PROHIBITED BY LAW.

WESTON & SAMPSON RETAINS THE EXCLUSIVE USE OF THE INTELLECTUAL PROPERTY CONTAINED HEREIN.

Seal:

COMMONWEALTH OF MASSACHUSETTS
NATHAN M. SEIFERT
STRUCTURAL
No. 41693
REGISTERED PROFESSIONAL ENGINEER
5/21/2021

Issued For:

BID DOCUMENTS

Scale: As indicated

Key Plan:

NORTH

Date:	5/21/2021
Drawn By:	EAS
Reviewed By:	QS
Approved By:	NMS
W&S Project No.:	2200740
W&S File No.:	TBD

Drawing Title:

STEEL FRAMING
SECTIONS

Sheet Number:

S301

6/1/2021 9:03:37 AM C:\Users\shaw.erica\OneDrive - WESTON & SAMPSON ENGINEERS, Inc\Documents\2200740_Blackstone WTP_STRUCTURAL_Rvt2020_Shaw.Erica.rvt

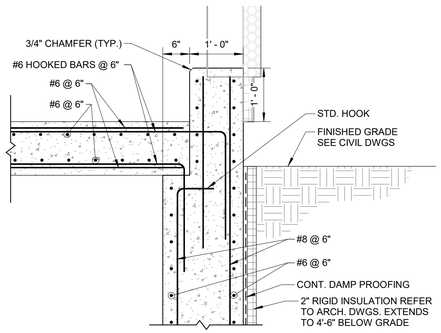

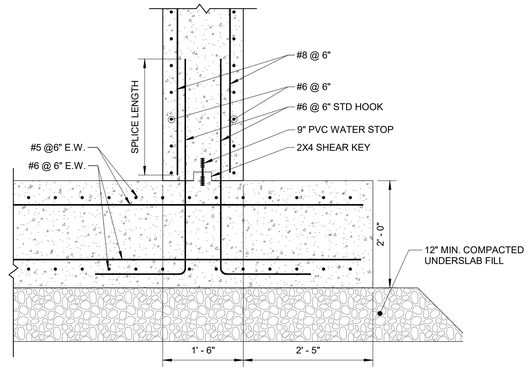

1 TYP. FOUNDATION WALL SECTION

SCALE: 3/4" = 1'-0"

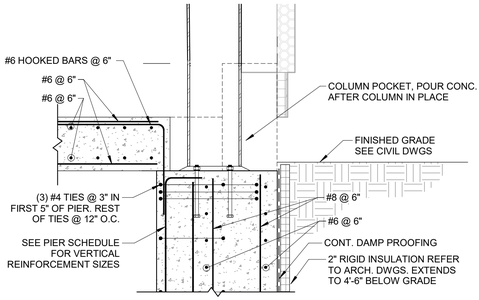

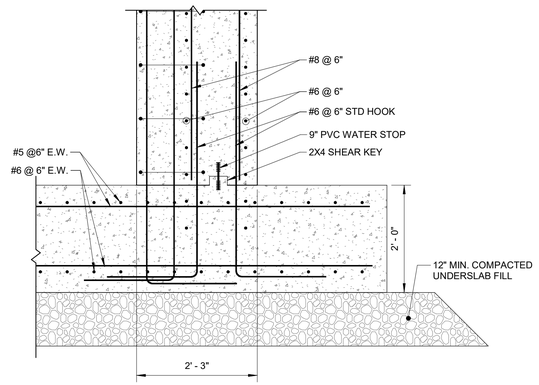

3 SECTION AT FOUNDATION PIER

SCALE: 3/4" = 1'-0"

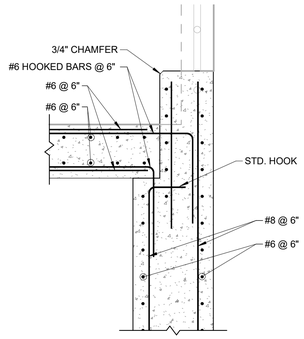

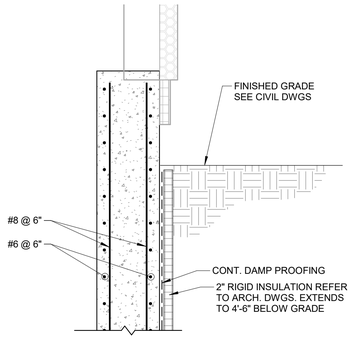

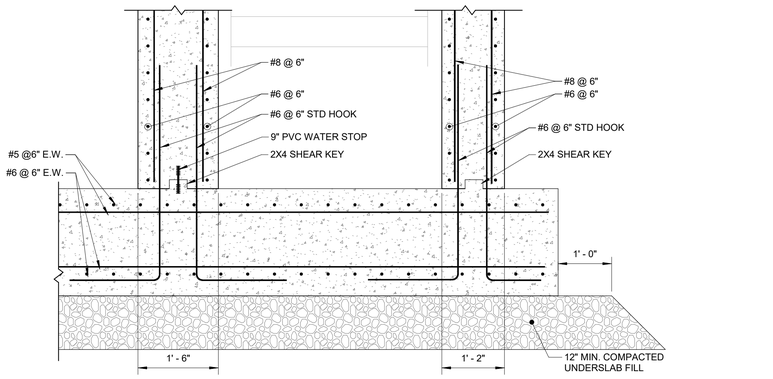

4 FOUNDATION SECTION @ STAIRS

SCALE: 3/4" = 1'-0"

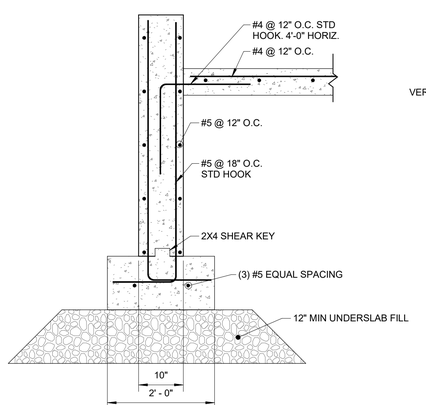

2 SECTION AT BREEZEWAY FOUNDATION

SCALE: 3/4" = 1'-0"

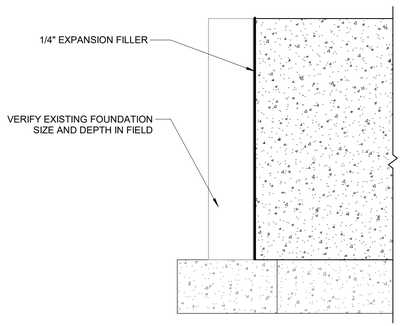

6 BREEZEWAY FOUNDATION CONNECTION

SCALE: 3/4" = 1'-0"

PIER SCHEDULE

MARK	DIMENSIONS		T.O. PIER ELEVATION	REINFORCEMENT		COMMENTS
	WIDTH [IN.]	LENGTH [IN.]		VERTICAL	TIES	
P1	15	22	+1' - 0"	(8) #8	#4 @ 12"	(3) #4 TIES IN TOP 5"
P2	21	30	-1' - 0"	(8) #8'S, (4) #5'S	#4 @ 12"	(3) #4 TIES IN TOP 5"
P2	21	30	+1' - 0"	(8) #8'S, (4) #5'S	#4 @ 12"	(3) #4 TIES IN TOP 5"

NOTE(S):

1. FINAL LOCATIONS OF PIERS SHALL BE COORDINATED WITH APPROVED METAL BUILDING SHOP DRAWINGS. PIERS SHALL BE CENTERED BELOW COLUMN SECTION AT THE BASE PLATE LEVEL.
2. METAL BUILDING BASE PLATES SHALL BE DESIGNED TO FIT ON AND WITHIN PIER DIMENSIONS SHOWN ABOVE. ANY PIER MODIFICATIONS WILL BE AT COST OF THE CONTRACTOR. THE CONTRACTOR SHALL IDENTIFY ANY PIERS REQUIRING MODIFICATIONS AND SUBMIT TO THE ENGINEER FOR REVIEW.
3. ANCHOR RODS SHALL RESIDE WITHIN REINFORCING TIES AND SHALL BE A MINIMUM OF 7xBOLT DIAMETER FROM EDGE OF PILASTER / FOUNDATION. FINAL ANCHOR BOLT LAYOUT BY METAL BUILDING MANUFACTURER. SEE ANCHOR BOLT SCHEDULE FOR REQUIRED EMBEDMENT DEPTHS.
4. A MINIMUM OF (4) LONGITUDINAL REINFORCING BARS IN THE PILASTER SHALL HAVE A STANDARD HOOK AT THE TOP AND BOTTOM. BALANCE OF LONGITUDINAL BARS HAVE STANDARD HOOKS AT THE BOTTOM
5. WALL REINFORCING SHALL PASS CONTINUOUSLY THROUGH THE PIER.
6. TIES SHALL BE #4 @ 12" VERTICALLY WITH 3 TIES LOCATED WITHIN THE TOP 5" ON THE PIER, UNLESS OTHERWISE NOTED.
7. PEDESTALS ARE DEFINED AS SET INTEGRAL WITH A WALL. PEDESTALS ARE PIERS WHICH STAND ALONE.
8. PIERS SUPPORTING PORTAL FRAMES ARE TURNED 90 DEGREES IN PLAN. SEE PLAN FOR REQUIRED ORIENTATIONS.
9. MEZZANINE COLUMNS MAY BE OFFSET FROM THE FOUNDATION WALL AS APPROVED BY THE ENGINEER TO ACCOMMODATE FRAMING REQUIREMENTS.
10. CENTER PIER BENEATH BASEPLATE. PIER OVERLAP WITH FOUNDATION WALL MAY VARY BASED ON BASEPLATE LOCATION. PIER REINFORCING MUST BE CENTERED UNDER BASEPLATE AND MEET COVER REQUIREMENTS ON S001.

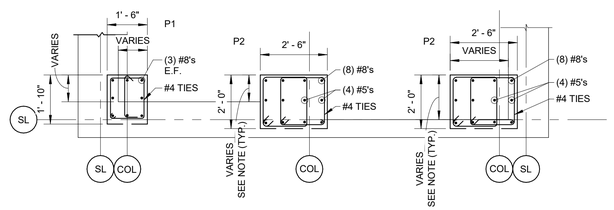

5 PIER DETAIL

SCALE: 3/8" = 1'-0"

Project:

TOWN OF BLACKSTONE,
MASSACHUSETTS
DEPARTMENT OF PUBLIC
WORKS

BLACKSTONE WATER
TREATMENT PLANT

53 ELM STREET, BLACKSTONE,
MASSACHUSETTS, 01504

Weston & Sampson

Weston & Sampson Engineers, Inc.
55 Walkers Brook Drive, Suite 100
Reading, MA 01867
978.532.1900 800.SAMPSON

www.westonandsampson.com

Consultants:

Revisions:

No.	Date	Description

COA:

'COPYRIGHT ©2021 BY WESTON & SAMPSON
THIS DRAWING HAS BEEN PREPARED FOR THE EXCLUSIVE USE OF THE CLIENT & PROJECT NAME LISTED ON THIS DRAWING ONLY.

REPRODUCTION, RELEASE OF UTILIZATION OF THE DRAWING CONTENT BY OTHER CLIENTS / FIRMS AND ON OTHER PROJECTS IS PROHIBITED BY LAW.

WESTON & SAMPSON RETAINS THE EXCLUSIVE USE OF THE INTELLECTIAL PROPERTY CONTAINED HEREIN.

Seal:

COMMONWEALTH OF MASSACHUSETTS
NATHAN M. SEIFERT
STRUCTURAL
No. 41693
REGISTERED
PROFESSIONAL ENGINEER
5/21/2021

Issued For:

BID DOCUMENTS

Scale: As indicated

Key Plan:

NORTH

Date:	5/21/2021
Drawn By:	EAS
Reviewed By:	QS
Approved By:	NMS
W&S Project No.:	2200740
W&S File No.:	TBD

Drawing Title:

FOUNDATION
SECTIONS & DETAILS I

Sheet Number:

S401

C:\Users\shaw.erica\OneDrive - WESTON & SAMPSON ENGINEERS, Inc\Documents\2200740_Blackstone WTP_STRUCTURAL_Rvt2020_Shaw.Erica.rvt
6/1/2021 9:03:40 AM

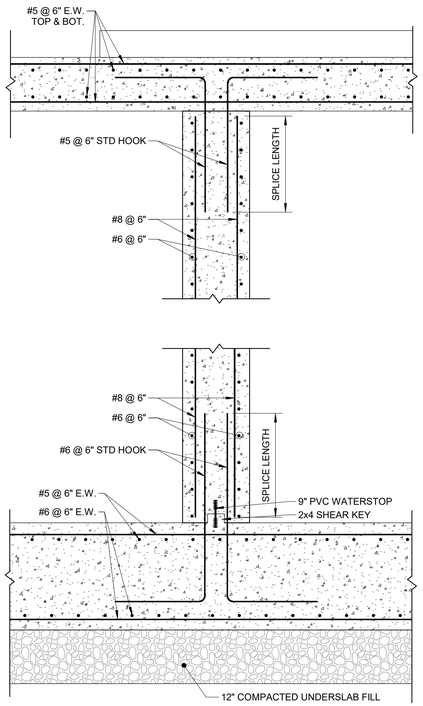

1 SECTION AT INTERIOR TANK WALLS
SCALE: 3/4" = 1'-0"

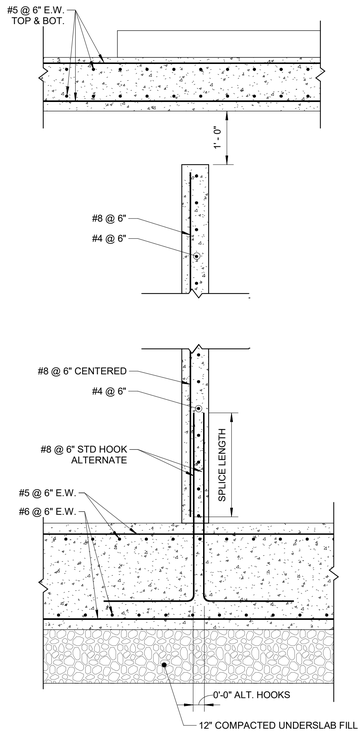

2 SECTION AT BAFFLE WALL
SCALE: 3/4" = 1'-0"

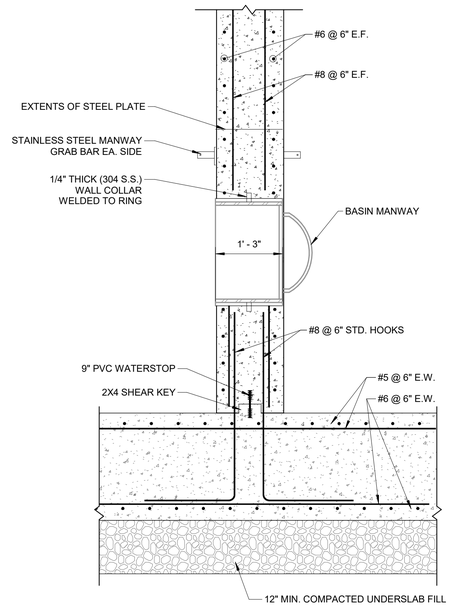

NOTES:
1. FOR ADDITIONAL MANWAY DETAILS, SEE ARCHITECTURAL DETAIL

3 SECTION AT MANWAY
SCALE: 3/4" = 1'-0"

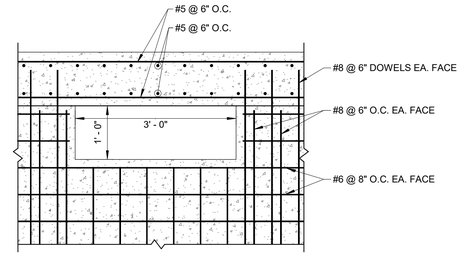

4 OVERFLOW CONNECTION DETAIL
SCALE: 3/4" = 1'-0"

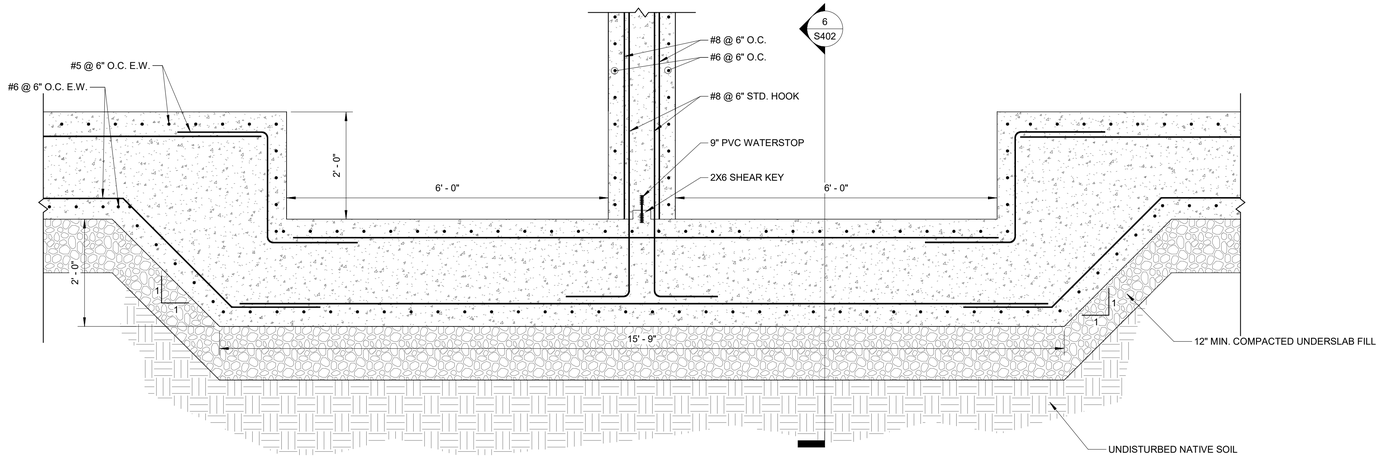

5 SECTION I AT SUMP PIT
SCALE: 3/4" = 1'-0"

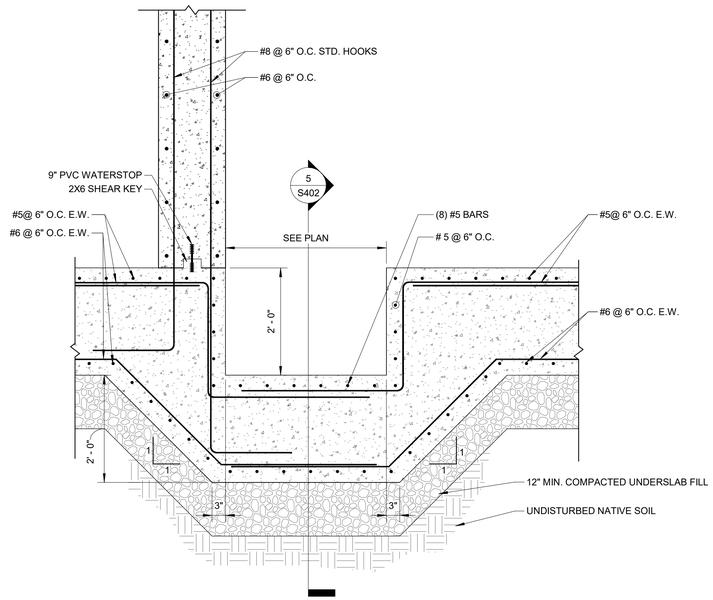

6 SECTION II AT SUMP PIT
SCALE: 3/4" = 1'-0"

Project:

TOWN OF BLACKSTONE,
MASSACHUSETTS
DEPARTMENT OF PUBLIC
WORKS

BLACKSTONE WATER
TREATMENT PLANT

53 ELM STREET, BLACKSTONE,
MASSACHUSETTS, 01504

Weston & Sampson Engineers, Inc.
55 Walkers Brook Drive, Suite 100
Reading, MA 01867
978.532.1900 800.SAMPSON
www.westonandsampson.com

Consultants:

Revisions:

No.	Date	Description

COA:

"COPYRIGHT ©2021 BY WESTON & SAMPSON
THIS DRAWING HAS BEEN PREPARED FOR THE EXCLUSIVE USE OF THE CLIENT & PROJECT NAME LISTED ON THIS DRAWING ONLY.

REPRODUCTION, RELEASE OF UTILIZATION OF THE DRAWING CONTENT BY OTHER CLIENTS / FIRMS AND ON OTHER PROJECTS IS PROHIBITED BY LAW.

WESTON & SAMPSON RETAINS THE EXCLUSIVE USE OF THE INTELLECTUAL PROPERTY CONTAINED HEREIN.

Seal:

COMMONWEALTH OF MASSACHUSETTS
NATHAN M. SEIFERT
STRUCTURAL
No. 41693
REGISTERED PROFESSIONAL ENGINEER
5/21/2021

Issued For:
BID DOCUMENTS

Scale: 3/4" = 1'-0"

Key Plan:

NORTH

Date:	5/21/2021
Drawn By:	Author
Reviewed By:	Checker
Approved By:	Approver
W&S Project No.:	2200740
W&S File No.:	TBD

Drawing Title:

FOUNDATION
SECTIONS & DETAILS
II

Sheet Number:

S402

C:\Users\shaw.erica\OneDrive - WESTON & SAMPSON ENGINEERS, Inc\Documents\2200740_Blackstone WTP_STRUCTURAL_Rvt2020_Shaw.Erica.rvt
6/1/2021 9:03:42 AM

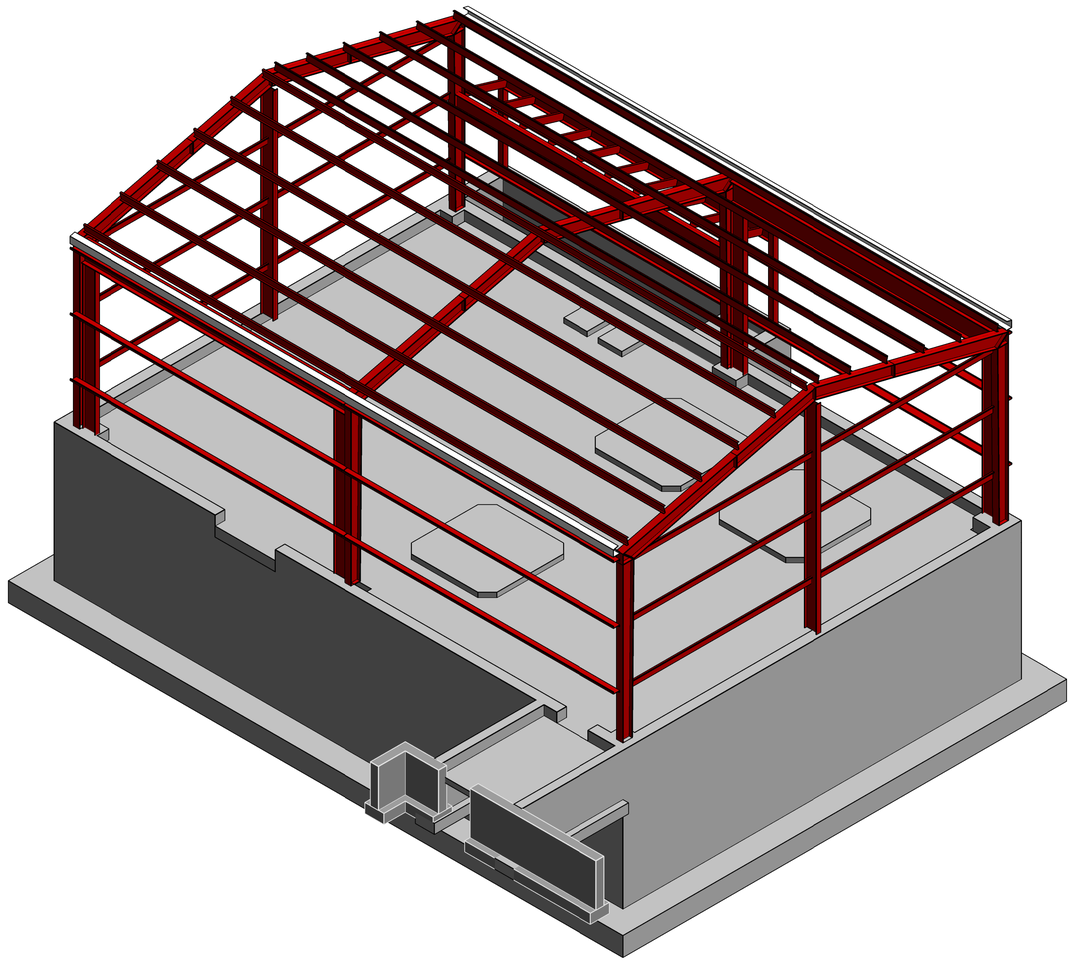

1 3D VIEW 1
SCALE:

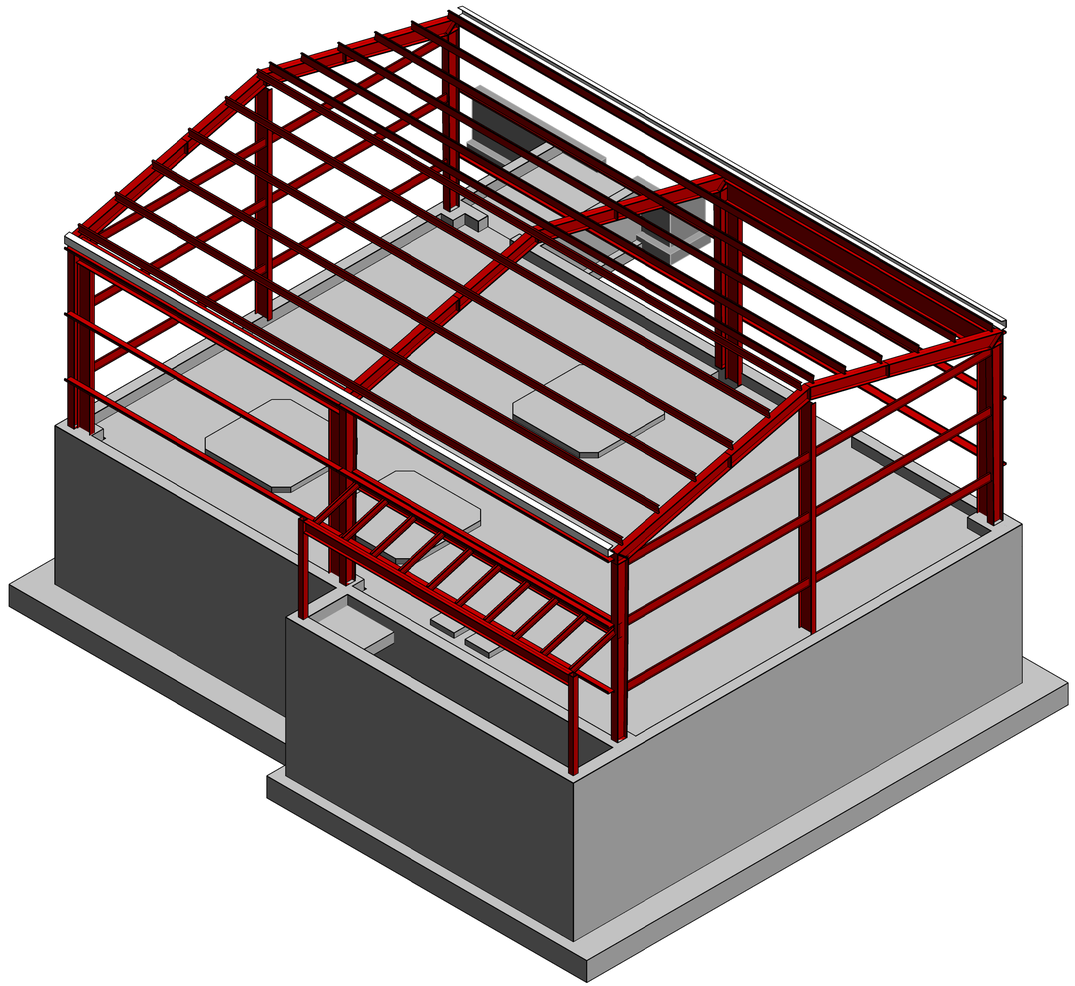

2 3D VIEW 2
SCALE:

NOTES:
1. 3D STRUCTURAL MODEL IS SCHEMATIC AND FOR INFORMATION ONLY. COORDINATE WITH ARCHITECTURAL DRAWINGS FOR DOORS, WINDOWS AND TRANSLUCENT PANEL LOCATIONS AND DETAILS.

6/1/2021 9:03:45 AM C:\Users\shaw.erica\OneDrive - WESTON & SAMPSON ENGINEERS, Inc\Documents\2200740_Blackstone WTP_STRUCTURAL_Rvt2020_Shaw.Erica.rvt

Project:
TOWN OF BLACKSTONE,
MASSACHUSETTS
DEPARTMENT OF PUBLIC
WORKS

BLACKSTONE WATER
TREATMENT PLANT

53 ELM STREET, BLACKSTONE,
MASSACHUSETTS, 01504

Weston & Sampson Engineers, Inc.
55 Walkers Brook Drive, Suite 100
Reading, MA 01867
978.532.1900 800.SAMPSON

www.westonandsampson.com

Consultants:

Revisions:

No.	Date	Description

COA:

"COPYRIGHT ©2021 BY WESTON & SAMPSON
THIS DRAWING HAS BEEN PREPARED FOR THE EXCLUSIVE USE OF THE CLIENT & PROJECT NAME LISTED ON THIS DRAWING ONLY.

REPRODUCTION, RELEASE OF UTILIZATION OF THE DRAWING CONTENT BY OTHER CLIENTS / FIRMS AND ON OTHER PROJECTS IS PROHIBITED BY LAW.

WESTON & SAMPSON RETAINS THE EXCLUSIVE USE OF THE INTELLECTIAL PROPERTY CONTAINED HEREIN.

Seal:
COMMONWEALTH OF MASSACHUSETTS
NATHAN M. SEIFERT
STRUCTURAL
No. 41693
REGISTERED PROFESSIONAL ENGINEER
5/21/2021

Issued For:
BID DOCUMENTS

Scale:

Key Plan:

NORTH

Date:	5/21/2021
Drawn By:	EAS
Reviewed By:	QS
Approved By:	NMS
W&S Project No.:	2200740
W&S File No.:	TBD

Drawing Title:
3D VIEWS

Sheet Number:
S900

ABBREVIATIONS

Ø	ROUND/DIAMETER
ABV	ABOVE
AC	AIR CONDITIONING
ACCU	AIR COOLED CONDENSING UNIT
ACD	AUTOMATIC CONTROL DAMPER
ACT	ACOUSTICAL CEILING TILE
ACU	AIR CONDITIONING UNIT
AD	ACCESS DOOR
ADD	ADDENDUM
ADD'L	ADDITIONAL
AF	AIR FOIL
AFF	ABOVE FINISHED FLOOR
AFUE	ANNUAL FUEL UTILIZATION EFFICIENCY
AHU	AIR HANDLING UNIT
AL	ACOUSTIC DUCT LINER
ALT	ALTERNATE
AMB	AMBIENT
AMP	AMPERE
AP	ACCESS PANEL
APD	AIR PRESSURE DROP
ARCH	ARCHITECT/ARCHITECTURAL
AS	AIR SEPARATOR
ATC	AUTOMATIC TEMPERATURE CONTROL
ATM	ATMOSPHERE
AVG	AVERAGE
B	BOILER
BDD	BACKDRAFT DAMPER
BFP	BACKFLOW PREVENTER
BHP	BRAKE HORSEPOWER
BI	BACKWARD INCLINED
BLDG	BUILDING
BP	BOILER PUMP
BTU	BRITISH THERMAL UNITS
BTUH	BRITISH THERMAL UNITS PER HOUR
CA	COMBUSTION AIR
CAP	CAPACITY
CAV	CONSTANT AIR VOLUME
CC	COOLING COIL
CD	CONDENSATE DRAIN
CENT	CENTRIFUGAL
CF	CUBIC FEET
CFM	CUBIC FEET PER MINUTE
CL	CENTERLINE
CLG	CEILING
CO	CLEAN OUT
CO	CARBON MONOXIDE
CO2	CARBON DIOXIDE
COL	COLUMN
CONC	CONCRETE
CONN	CONNECTION
CP	CONDENSATE PUMP
CSF	CHEMICAL SHOT FEEDER
CU	CONDENSING UNIT
CUH	CABINET UNIT HEATER
CV	CONSTANT VOLUME TERMINAL UNIT
CW	COLD WATER
D	DRAIN
D	DEPTH
DB	DRY BULB
DDC	DIRECT DIGITAL CONTROLS
DEG	DEGREE
DH	DUCT HEATER
DIA	DIAMETER
DIM	DIMENSION
DN	DOWN
DP	DIFFERENTIAL PRESSURE
DX	DIRECT EXPANSION
EA	EACH
E/A	EXHAUST AIR
EAT	ENTERING AIR TEMPERATURE
EBB	ELECTRIC BASEBOARD
ECM	ELECTRONICALLY COMMUTATED MOTOR
EER	ENERGY EFFICIENCY RATIO
EF	EXHAUST FAN
EVAP	EVAPORATOR
EUH	ELECTRIC UNIT HEATER
EWT	ENTERING WATER TEMPERATURE
EXH	EXHAUST
EXP	EXPANSION
EXT	EXTERNAL
EXIST	EXISTING
F	DEGREES FAHRENHEIT
FA	FREE AREA
FC	FLEXIBLE CONNECTION
FCU	FAN COIL UNIT
FD	FIRE DAMPER
FL	FLOOR
FLA	FULL LOAD AMPS
FPM	FEET PER MINUTE
FPS	FEET PER SECOND
FS	FLOW SWITCH
FT	FOOT/FEET
FTR	FIN TUBE RADIATION
G	GAS
GA	GAUGE
GAL	GALLON
GALV	GALVANIZED
GC	GENERAL CONTRACTOR
GPH	GALLONS PER HOUR
GPM	GALLONS PER MINUTE
GRD	GRADE
GV	GRAVITY VENTILATOR
HD	HEAD
HGB	HOT GAS BYPASS
HP	HORSE POWER
HP	HIGH POINT
HR	HOUR
HRU	HEAT RECOVERY UNIT
HRV	HEAT RECOVERY VENTILATOR
HT	HEIGHT
HTG	HEATING
HTR	HEATER
HW	HOT WATER
HWC	HOT WATER HEATING COIL
HWR	HOT WATER RETURN
HWS	HOT WATER SUPPLY
HX	HEAT EXCHANGER
HZ	HERTZ
ID	INDIRECT
ID	INSIDE DIAMETER
IEER	INTEGRATED EER
IN	INCH
IN WC	INCHES WATER COLUMN
IN WG	INCHES WATER GAUGE
INV	INVERT
KW	KILOWATT
L	LENGTH
LAT	LEAVING AIR TEMPERATURE
LB	POUND
LB/HR	POUNDS PER HOUR
LD	LINEAR DIFFUSER
LF	LINEAR FEET
LP	LOW POINT
LP	LOW PRESSURE
LVG	LEAVING
LVR	LOUVER
LWT	LEAVING WATER TEMPERATURE
M/A	MIXED AIR
MAX	MAXIMUM
MAU	MAKE-UP AIR UNIT
MAV	MANUAL AIR VENT
MBH	ONE THOUSAND BTU PER HOUR
MCA	MINIMUM CIRCUIT AMPACITY
MCF	ONE THOUSAND CUBIC FEET
MD	MOTORIZED DAMPER
MECH	MECHANICAL
MFR	MANUFACTURER
MIN	MINIMUM
MISC	MISCELLANEOUS
MOCP	MAXIMUM OVER CURRENT PROTECTION
MTR	MOTOR
MU	MAKE-UP WATER
N/A	NOT APPLICABLE
NC	NOISE CRITERIA
NC	NORMALLY CLOSED
NIC	NOT IN CONTRACT
NG	NATURAL GAS
NO	NUMBER
NO	NORMALLY OPEN
NTS	NOT TO SCALE
O/A	OUTSIDE AIR
OAI	OUTDOOR AIR INTAKE
OBD	OPPOSED BLADE DAMPER
OC	ON CENTER
OCC	OCCUPIED
OD	OUTSIDE DIAMETER
ODP	OPEN DRIP PROOF
OED	OPEN END DUCT
OV	OUTLET VELOCITY
P	PUMP
PD	PRESSURE DROP
PD	PRESSURE DIFFERENCE
PH	PHASE
PHC	PREHEAT COIL
PLBG	PLUMBING
POS	PROVIDED BY OTHER SECTION
PRESS	PRESSURE
PRV	PRESSURE REDUCING VALVE
PSI	POUNDS PER SQUARE INCH
PSIA	PSI ABSOLUTE
PSID	PSI DIFFERENTIAL
PSIG	PSI GAUGE
PWR	POWER
QTY	QUANTITY
R	RADIUS
R/A	RETURN AIR
RECESSED	RECESSED
RED	REDUCER
RET	RETURN
RF	RETURN FAN
RH	RELATIVE HUMIDITY
RHC	REHEAT COIL
RHGB	REFRIGERANT HOT GAS BYPASS
RL	REFRIGERANT LIQUID
RLA	RUNNING LOAD AMPS
RL/A	RELIEF AIR
RLF	RELIEF
RM	ROOM
RPM	REVOLUTIONS PER MINUTE
RS	REFRIGERANT SUCTION
S/A	SUPPLY AIR
SCR	SCREEN
SD	SMOKE DAMPER
SDET	SMOKE DETECTOR
SEER	SEASONAL ENERGY EFFICIENCY RATING
SENS	SENSIBLE
SF	SQUARE FOOT
SF	SUPPLY FAN
SHC	SENSIBLE HEAT CAPACITY
SHR	SENSIBLE HEAT RATIO
SP	STATIC PRESSURE
SPECS	SPECIFICATIONS
SS	STAINLESS STEEL
SUP	SUPPLY
T	THERMOSTAT
T/A	TRANSFER AIR
TD	TEMPERATURE DROP
TEFC	TOTALLY ENCLOSED FAN COOLED
TEMP	TEMPERATURE
TF	TRANSFER FAN
TOD	TOP OF DUCT
TOP	TOP OF PIPE
TOS	TOP OF STEEL
TOT	TOTAL
TR	TRANSFER
TSP	TOTAL STATIC PRESSURE
TYP	TYPICAL
UG	UNDERGROUND
UH	UNIT HEATER
UNOCC	UNOCCUPIED
UV	UNIT VENTILATOR
V	VENT
V	VOLTS
VAC	VACUUM
VAV	VARIABLE AIR VOLUME
VB	VACUUM BREAKER
VD	VOLUME DAMPER
VEL	VELOCITY
VFD	VARIABLE FREQUENCY DRIVE
VTR	VENT THROUGH ROOF
W	WATT
W	WIDTH
W/	WITH
W/O	WITHOUT
WB	WET BULB
WC	WATER COLUMN
WG	WATER GAUGE
WMS	WIRE MESH SCREEN
WPD	WATER PRESSURE DROP
WTD	WATER TEMPERATURE DIFFERENCE
ΔP	CHANGE IN PRESSURE
ΔT	CHANGE IN TEMPERATURE
°F	DEGREES FAHRENHEIT

NOTE: SOME OR ALL SYMBOLS MAY BE USED ON THIS PROJECT

MECHANICAL GENERAL NOTES

1. MECHANICAL GENERAL NOTES APPLY TO ALL MECHANICAL DRAWINGS. THE WORD "CONTRACTOR" USED IN "HVAC" OR "MECHANICAL" WORK SHALL MEAN THE HVAC FILED SUB-BIDDER OR MECHANICAL CONTRACTOR.
2. THIS PROJECT INVOLVES NEW CONSTRUCTION AND CONSTRUCTION INSIDE AN EXISTING STRUCTURES. CONTRACTORS, BY SUBMITTING A BID, ARE DEEMED TO BE COMPLETELY FAMILIAR WITH THE EXISTING CONDITIONS OF THE BUILDING AS IT INFLUENCES THE WORK DESCRIBED. ABSOLUTELY NO CLAIMS FOR EXTRA COMPENSATION WILL BE CONSIDERED FOR EXISTING CONDITIONS VISIBLE OR REASONABLY INFERABLE FROM A CAREFUL EXAMINATION OF THE EXISTING BUILDING.
3. THE CONTRACTOR SHALL INSPECT THE EXISTING FIELD CONDITIONS AT THE SITE AND ANY AVAILABLE "AS-BUILT" BASE BUILDING CONTRACT DOCUMENTS PRIOR TO THE START OF ANY WORK TO DETERMINE WHAT EFFECT THE EXISTING CONDITIONS WILL HAVE ON HIS WORK. POTENTIAL PROBLEM AREAS SHALL BE BROUGHT TO THE ATTENTION OF THE ARCHITECT AND/OR ENGINEER IMMEDIATELY.
4. THE CONTRACTOR SHALL BE RESPONSIBLE FOR FIELD VERIFYING, PRIOR TO FINAL BID, ALL EXISTING CONDITIONS RELATED TO THE MECHANICAL SYSTEMS ASSOCIATED WITH THIS PROJECT.
5. THE CONTRACTOR SHALL CONNECT HIS WORK TO VARIOUS EXISTING PIPING, DUCTWORK, AND CONTROL SYSTEMS IN THE BASE BUILDING. THE NEW WORK SHALL BE COMPATIBLE WITH THE EXISTING SYSTEMS. LOCATION OF EQUIPMENT OR THE ROUTING OF THE VARIOUS SYSTEMS AS WELL AS OPENINGS IN FLOOR SLABS OR WALLS SHALL BE GOVERNED BY THE EXISTING CONDITIONS AS THEY APPEAR IN THE FIELD OR ON THE "AS-BUILT" DRAWINGS.
6. CARE SHALL BE TAKEN DURING THE INSTALLATION TO NOT DAMAGE OR INTERRUPT BUILDING SYSTEMS AND SERVICES THAT ARE ALREADY INSTALLED. DAMAGE TO SUCH SYSTEMS OR EQUIPMENT CAUSED BY THIS CONTRACTOR DURING INSTALLATION SHALL BE REPAIRED AND/OR REPLACED AT THIS CONTRACTOR'S EXPENSE TO THE COMPLETE SATISFACTION OF THE BUILDING OWNER.
7. SHUTDOWN OF EXISTING SYSTEMS FOR CONNECTION TO EXISTING SERVICES SHALL BE COORDINATED WITH THE CONSTRUCTION MANAGER OR GENERAL CONTRACTOR AND BUILDING OWNER. THIS CONTRACTOR SHALL SUBMIT REQUESTS, WHERE THEY AFFECT THE OPERATION OF THE BUILDING SYSTEMS, AT LEAST ONE WEEK IN ADVANCE OF ANY REQUIRED SHUTDOWN. THE ACTUAL SHUTDOWN PERIOD SHALL BE AS SHORT AS POSSIBLE AND AT A TIME MUTUALLY AGREEABLE TO THE BUILDING OWNER AND THE CONSTRUCTION MANAGER/GENERAL CONTRACTOR.
8. LOCATIONS OF PIPING, DUCTWORK AND EQUIPMENT AS INDICATED ON THE DRAWING, ARE APPROXIMATE AND SUBJECT TO ADJUSTMENTS IN THE FIELD. WORK SHALL BE COORDINATED WITH ALL OTHER TRADES TO AVOID INTERFERENCE IN THE FIELD.
9. ALL WORK SHALL BE COORDINATED WITH ALL TRADES INVOLVED. OFFSETS IN PIPING AND DUCTS (INCLUDING DIVIDED DUCTS) AND TRANSITIONS AROUND OBSTRUCTIONS SHALL BE PROVIDED AT NO ADDITIONAL COST TO THE OWNER.
10. VERIFY ALL EQUIPMENT CONNECTIONS WITH MANUFACTURER'S CERTIFIED DRAWINGS. VERIFY AND PROVIDE DUCT AND/OR PIPE TRANSITIONS TO FURNISHED EQUIPMENT. FIELD VERIFY AND COORDINATE ALL DIMENSIONS BEFORE FABRICATION.
11. ALL MATERIALS AND EQUIPMENT UNLESS SPECIFICALLY INDICATED AS REUSED, SHALL BE NEW.
12. ACCESS PANELS SHALL BE PROVIDED TO ALLOW FOR CLEANING OF COILS AND SERVICING OF DAMPERS, HEATERS, VALVES, AND ALL CONCEALED MECHANICAL EQUIPMENT.
13. EXISTING ROOM THERMOSTATS AND SENSORS SHALL BE PROTECTED DURING CONSTRUCTION AND RELOCATED AS INDICATED ON THE DRAWINGS. INSTALL NEW AND RELOCATED ROOM THERMOSTATS AND SENSORS 4 FEET AFF OR AS DIRECTED OTHERWISE BY ARCHITECT.
14. THE CONTRACTOR SHALL PERFORM SERVICE AND REPAIR ON THE EXISTING EQUIPMENT AND ITS ACCESSORIES AS INDICATED ON THE CONTRACT DRAWINGS. THIS CONTRACTOR SHALL ALSO VISIT THE SITE, PRIOR TO FINAL BIDDING, AND VERIFY ALL EXISTING SITE CONDITIONS. PROVIDE ALL MATERIALS AND COMPONENTS AS NEEDED. THE CONTRACTOR SHALL REPORT ANY EQUIPMENT DEFICIENCIES FOUND TO THE ARCHITECT AND/OR ENGINEER.
15. THE FIRE PROOFING OF THE BUILDING STRUCTURE IS NOT TO BE REMOVED FOR THE INSTALLATION OF HANGERS, SUPPORTS, DUCTWORK, ETC. IF FIRE PROOFING IS DAMAGED, IT SHALL BE REPAIRED AT THE EXPENSE OF THE TRADE.
16. THE CONTRACTOR SHALL TEST AND CALIBRATE ALL CONTROLS AND VERIFY ALL ARE FULLY FUNCTIONAL AND SUBMIT DOCUMENTATION. SEE SPECIFICATIONS FOR ADDITIONAL REQUIREMENTS.
17. THE CONTRACTOR SHALL PROVIDE AND SUBMIT DOCUMENTATION FOR TESTING AND BALANCING OF ALL AIR AND WATER SYSTEMS, DUCT AND PIPING PRESSURE AND LEAKAGE TESTS, OPERATING AND MAINTENANCE MANUALS, AND AS BUILT DRAWINGS. SEE SPECIFICATIONS FOR ADDITIONAL REQUIREMENTS.
18. REFER TO THE PROJECT SPECIFICATIONS FOR FURTHER REQUIREMENTS.
19. MANY EQUIPMENT SCHEDULES DO NOT LIST QUANTITIES. CONTRACTOR SHALL REFER TO ALL DRAWINGS AND PROVIDE THE REQUIRED QUANTITIES FOR ALL COMPONENTS.
20. IN ACCORDANCE WITH SPECIFICATION FOR DIVISION 23, THE CONTRACTOR SHALL COORDINATE WITH ALL TRADES AND PREPARE COORDINATION DRAWINGS PRIOR TO INSTALLATION. COORDINATION DRAWINGS SHALL BE SUBMITTED TO THE OWNERS REPRESENTATIVE FOR REVIEW PRIOR TO INSTALLATION.
21. FINAL PRODUCT SHALL BE A COMPLETE AND FUNCTIONING SYSTEM, AND SHALL CONFORM TO ALL REQUIREMENTS OF APPLICABLE FEDERAL, STATE, AND LOCAL CODES, INCLUDING BUT NOT LIMITED TO THE INTERNATIONAL BUILDING CODE AND INTERNATIONAL MECHANICAL CODE.
22. PROVIDE AUTOMATIC AIR VENT AT EACH HIGH POINT OF THE HEATING WATER PIPING SYSTEM. PROVIDE HOSE END BALL VALVES FOR DRAINING AT THE BOTTOM OF ALL LOW POINTS.
23. INSTALL PIPING SO THAT ALL VALVES, STRAINERS, UNIONS, FLANGES, AND OTHER APPURTENANCES ARE ACCESSIBLE.
24. ALL VALVES (EXCEPT CONTROL VALVES) AND STRAINERS SHALL BE FULL LINE SIZE OF PIPE.
25. UNIONS AND/OR FLANGES SHALL BE INSTALLED AT EACH PIECE OF EQUIPMENT.
26. ALL CONDENSATE DRAIN LINES SHALL BE FULL LINE SIZE OF THE UNIT DRAIN OUTLET, WITH "P" TRAP.
27. PROVIDE FLEXIBLE PIPE CONNECTIONS CONNECTED TO ALL PUMPS AND APPARATUS WITH ROTATING EQUIPMENT.
28. SUPPORT ALL EQUIPMENT AND PIPING FROM BUILDING STRUCTURE TO PROVIDE A VIBRATION FREE INSTALLATION. FURNISH AND INSTALL ALL SUPPLEMENTARY STEEL AND SUPPORTS AS REQUIRED.

PIPING ABBREVIATIONS

CD	CONDENSATE DRAIN
D	DRAIN
GMU	GLYCOL MAKE-UP
HWR	HOT WATER RETURN
HWS	HOT WATER SUPPLY
MU	MAKE-UP WATER
G	NATURAL GAS
PC	PUMPED CONDENSATE
RL	REFRIGERANT LIQUID
RS	REFRIGERANT SUCTION
V	VENT
(NAME)	REMOVE EXISTING PIPING

NOTE: SOME OR ALL SYMBOLS MAY BE USED ON THIS PROJECT

CALLOUT SYMBOLS

	CONNECT TO EXISTING
	LIMIT OF DEMOLITION
A / H2.0	SECTION DESIGNATION
	SECTION SHEET NUMBER
1	REVISION NUMBER
H	HUMIDISTAT/HUMIDITY SENSOR, WALL MOUNTED
H	HUMIDISTAT/HUMIDITY SENSOR, DUCT MOUNTED
T	THERMOSTAT, WALL MOUNTED
T	THERMOSTAT/TEMPERATURE SENSOR, DUCT MOUNTED
S	SENSOR, WALL MOUNTED
CO2	CARBON DIOXIDE SENSOR
CO	CARBON MONOXIDE SENSOR
MS	MANUAL SWITCH, WALL MOUNTED
	REMOVE EXISTING ITEM
SA(100)	S = SUPPLY A = SCHEDULED DIFFUSER (100) - CFM TO BALANCE TO
RA(100)	R = RETURN A = SCHEDULED DIFFUSER (100) - CFM TO BALANCE TO
EA(100)	E = EXHAUST A = SCHEDULED DIFFUSER (100) - CFM TO BALANCE TO
TA(100)	T = TRANSFER A = SCHEDULED DIFFUSER (100) - CFM TO BALANCE TO
XxX (100)	X = EXISTING NECK SIZE (RECTANGULAR SHOWN) (100) - REBALANCE TO DESIGNATED CFM
(XXX)	XXX = REBALANCE TO DESIGNATED GPM
VAV-XX	EQUIPMENT TAG (REFER TO SCHEDULES FOR DETAILS)

NOTE: SOME OR ALL SYMBOLS MAY BE USED ON THIS PROJECT

DUCTWORK/RGD SYMBOLS

F	FIRE DAMPER - SELF CLOSING W/ACCESS DOOR
S	SMOKE DAMPER - AUTOMATIC W/ ACCESS DOOR
C	COMBINATION FIRE/SMOKE DAMPER W/ ACCESS DOOR
V	MANUAL VOLUME DAMPER
B	BACKDRAFT DAMPER
M	MOTORIZED DAMPER - AUTOMATIC W/ ACCESS DOOR
SDET	SMOKE DETECTOR
	STANDARD 4-WAY BLOW SUPPLY DIFFUSER
	3-WAY BLOW SUPPLY DIFFUSER
OR	2-WAY BLOW SUPPLY DIFFUSER
	1-WAY BLOW SUPPLY DIFFUSER
	RETURN OR EXHAUST GRILLE OR REGISTER
	UNDER CUT DOOR (1")
	RETURN OR EXHAUST AIRFLOW
	SUPPLY AIRFLOW

NOTE: SOME OR ALL OF THE SYMBOLS MAY BE USED ON THIS PROJECT

PIPING LEGEND

	GATE VALVE (OUTSIDE SCREW AND YOKE UNLESS SPECIFIED OTHERWISE)
	GLOBE VALVE (OUTSIDE SCREW AND YOKE UNLESS SPECIFIED OTHERWISE)
	BALL VALVE
	BUTTERFLY VALVE
	DRAIN VALVE WITH CAP AND CHAIN
	PLUG VALVE
	PRESSURE REDUCING VALVE
	CHECK VALVE (SILENT TYPE ON PUMP DISCHARGE)
	STRAINER WITH HOSE END BLOWOFF VALVE, CAP AND CHAIN
	SOLENOID VALVE
	2-WAY MODULATING PRESSURE INDEPENDENT ACV
	2-WAY AUTOMATIC CONTROL VALVE (MODULATING)
	2-WAY AUTOMATIC CONTROL VALVE (TWO POSITION)
	3-WAY AUTOMATIC CONTROL VALVE (MODULATING)
	3-WAY AUTOMATIC CONTROL VALVE (TWO POSITION)
	AUTOMATIC FLOW LIMITING VALVE (PRESSURE INDEPENDENT)
	COMBINATION FLOW METER/SHUT-OFF/BALANCING VALVE (CIRCUIT SETTER)
	TRIPLE DUTY PUMP VALVE, CHECK, BALANCING (FLOW METER), SHUT-OFF
BTU	BTU METER (HOT TAP TYPE WITH VALVE)
FMT	FLOW METER/TRANSMITTER (HOT TAP TYPE WITH VALVE)
FS	FLOW SWICTH
	RELIEF/SAFETY VALVE
	THERMOSTATIC RADIATOR VALVE
	UNION
	BLIND FLANGE
	PIPE - CAPPED
	PRESSURE GAUGE (W/ BALL VALVE(S), SNUBBER)
PS	PRESSURE SWITCH
	THERMOMETER
VB	VACUUM BREAKER
PT	PRESSURE GAUGE/THERMOMETER WELL
AV	AIR VENT - AUTOMATIC
MV	AIR VENT - MANUAL
	DIRECTION OF FLOW
	FLEXIBLE CONNECTOR
	PIPE CONNECTION - TOP
	PIPE CONNECTION - BOTTOM
	PIPE - DOWN
	PIPE - UP
R	PITCH OF PIPE - (R) RISE OR (D) DROP
	REDUCER - CONCENTRIC
	REDUCER - ECCENTRIC
	PIPE BREAK (SINGLE LINE)
	DIRT LEG
CO	CLEANOUT FOR CONDENSATE DRAIN PIPE

NOTE: SOME OR ALL SYMBOLS MAY BE USED ON THIS PROJECT

Project:

TOWN OF BLACKSTONE, MASSACHUSETTS DEPARTMENT OF PUBLIC WORKS

WATER TREATMENT PLANT

53 ELM STREET, BLACKSTONE, MASSACHUSETS,01504

Weston & Sampson Engineers, Inc.
55 Walkers Brook Drive, Suite 100
Reading, MA 01867
978.532.1900 800.SAMPSON
www.westonandsampson.com

Consultants:

Revisions:

No.	Date	Description

COA:

©COPYRIGHT ©2021 BY WESTON & SAMPSON
THIS DRAWING HAS BEEN PREPARED FOR THE EXCLUSIVE USE OF THE CLIENT & PROJECT NAME LISTED ON THIS DRAWING ONLY.

REPRODUCTION, RELEASE OF UTILIZATION OF THE DRAWING CONTENT BY OTHER CLIENTS / FIRMS AND ON OTHER PROJECTS IS PROHIBITED BY LAW.

WESTON & SAMPSON RETAINS THE EXCLUSIVE USE OF THE INTELLECTUAL PROPERTY CONTAINED HEREIN.

Seal:

COMMONWEALTH OF MASSACHUSETTS
SCOTT E. HENRIQUES
MECHANICAL
No. 40721
REGISTERED PROFESSIONAL ENGINEER

Issued For:

BID DOCUMENTS

Scale:

Key Plan:

Date:	05/21/2021
Drawn By:	YK
Reviewed By:	SEH
Approved By:	SEH
W&S Project No.:	2200740
W&S File No.:	TBD

Drawing Title:

MECHANICAL LEGENDS, NOTES, AND ABBREVIATIONS

Sheet Number:

H000

5/28/2021 10:30:21 AM C:\Users\bootler\OneDrive - WESTON & SAMPSON ENGINEERS, Inc\Documents\2200740_Blackstone WTP_HVAC_V20_BootlerR.rvt

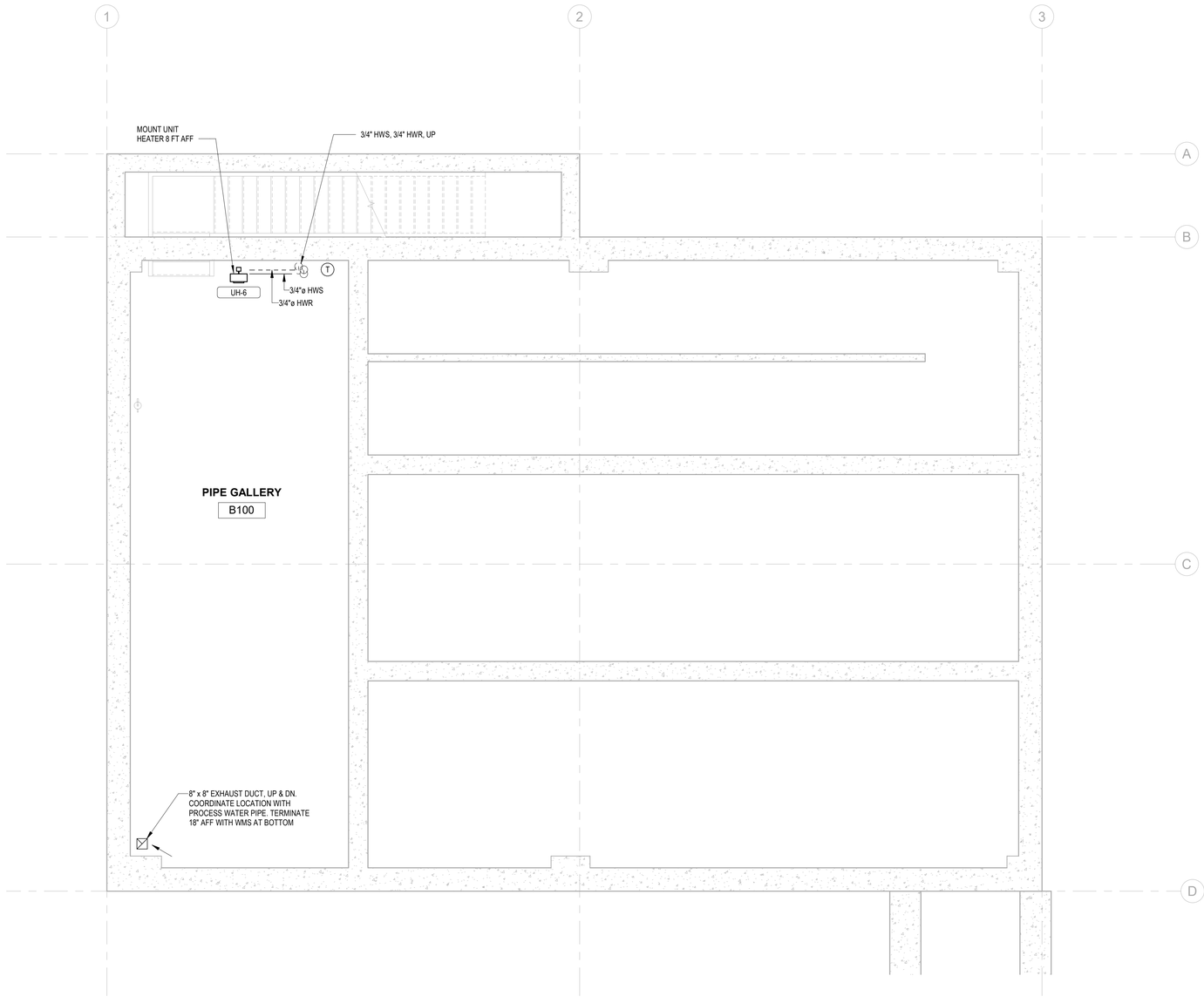

1 / H100A BASIN PLAN

1/4" = 1'-0"

0 2' 4' 8'

5/28/2021 10:30:22 AM C:\Users\boodlerl\OneDrive - WESTON & SAMPSON ENGINEERS, Inc\Documents\2200740_Blackstone WTP_HVAC_V20_BoodleR.rvt

Project:

TOWN OF BLACKSTONE, MASSACHUSETTS DEPARTMENT OF PUBLIC WORKS

WATER TREATMENT PLANT

53 ELM STREET, BLACKSTONE, MASSACHUSETS,01504

Weston & Sampson

Weston & Sampson Engineers, Inc.
55 Walkers Brook Drive, Suite 100
Reading, MA 01867
978.532.1900 800.SAMPSON

www.westonandsampson.com

Consultants:

Revisions:

No.	Date	Description

COA:

"COPYRIGHT ©2021 BY WESTON & SAMPSON
THIS DRAWING HAS BEEN PREPARED FOR THE EXCLUSIVE USE OF THE CLIENT & PROJECT NAME LISTED ON THIS DRAWING ONLY.

REPRODUCTION, RELEASE OF UTILIZATION OF THE DRAWING CONTENT BY OTHER CLIENTS / FIRMS AND ON OTHER PROJECTS IS PROHIBITED BY LAW.

WESTON & SAMPSON RETAINS THE EXCLUSIVE USE OF THE INTELLECTIAL PROPERTY CONTAINED HEREIN.

Seal:

Issued For:

BID DOCUMENTS

Scale:

Key Plan:

Date:	05/21/2021
Drawn By:	YK
Reviewed By:	SEH
Approved By:	SEH
W&S Project No.:	2200740
W&S File No.:	TBD

Drawing Title:

HVAC NEW BUILDING BASIN PLAN

Sheet Number:

H100A

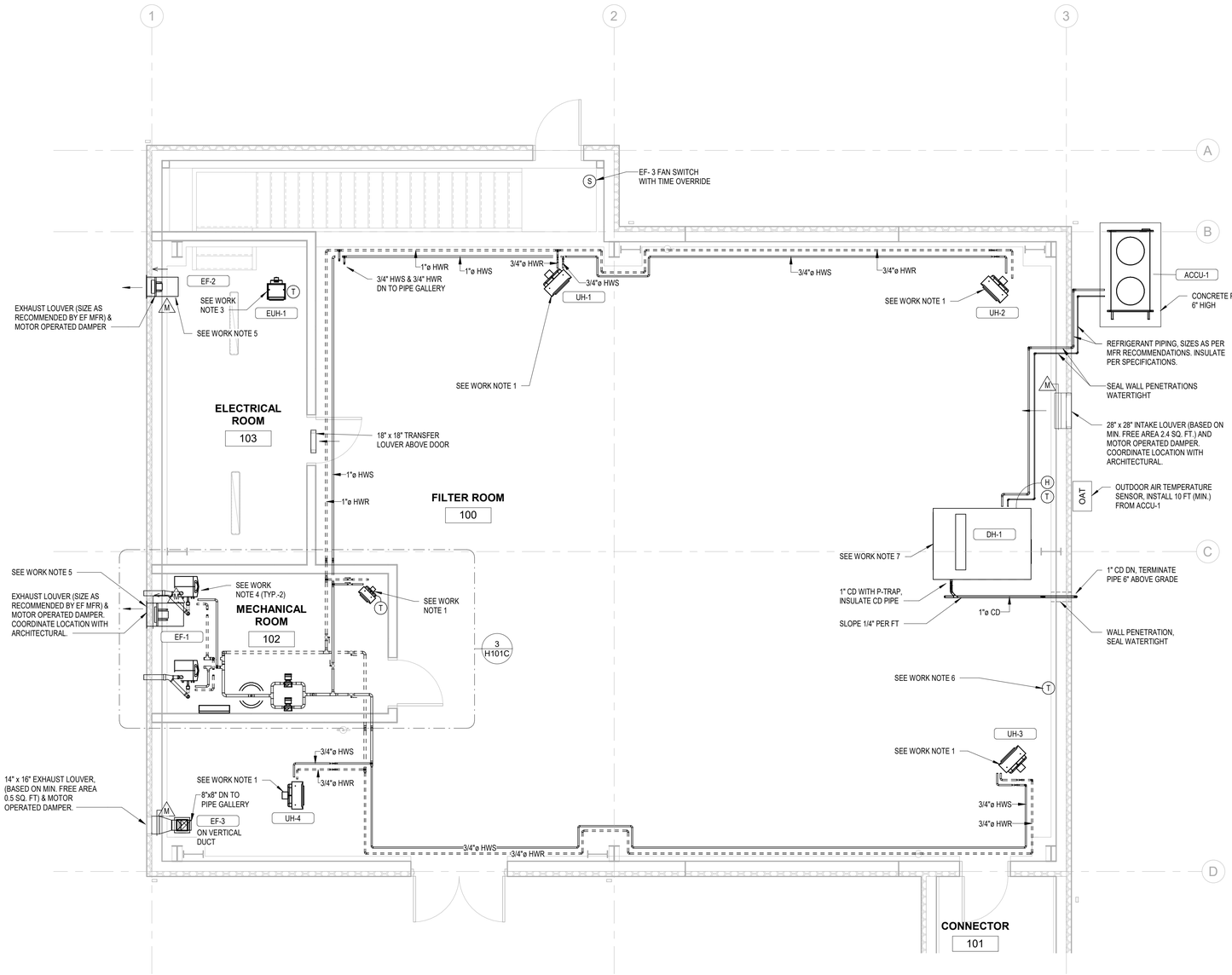

1 H101A HVAC NEW BUILDING FIRST FLOOR PLAN

1/4" = 1'-0"

0 2' 4' 8'

WORK NOTES:

1. HOT WATER UNIT HEATER, PROVIDE SUPPORTS BRACKETS. INSTALL 10 FT AFF.
2. HOT WATER UNIT HEATER, PROVIDE SUPPORT BRACKETS. INSTALL UNDER CEILING.
3. ELECTRIC UNIT HEATER, PROVIDE SUPPORTS. COORDINATE WITH ELECTRICAL.
4. GAS-FIRED BOILER, INSTALL ON 6" CONCRETE PAD. COORDINATE BOILER LOCATION AND REQUIRED CLEARANCES WITH PROCESS PIPE IN THE MECHANICAL ROOM.
5. WALL EXHAUST FAN. PROVIDE WITH LOUVER AND MOTOR OPERATED DAMPER (BY THE FAN MFR). COORDINATE WALL OPENING SIZE WITH FAN'S MFR. RECOMMENDATIONS.
6. COMMERCIAL PROGRAMMABLE THERMOSTAT, WALL MOUNTED, SHALL CONTROL (4) HW UNIT HEATERS IN FILTER ROOM, EXHAUST FAN EF-1 AND ASSOCIATED INTAKE LOUVER IN FILTER ROOM. THERMOSTAT SHALL HAVE MANUAL OVERRIDE CAPABILITY. REFER TO FAN CONTROLS ON DRAWING H7'01. INSTALL THERMOSTAT 4'-0" AFF.
7. MOUNT DEHUMIDIFIER UP HIGH, COORDINATE LOCATION WITH PROCESS PIPING AND EQUIPMENT. SUPPORT UNIT FROM STRUCTURAL ELEMENTS ABOVE.

Project:

TOWN OF BLACKSTONE,
MASSACHUSETTS DEPARTMENT OF
PUBLIC WORKS

WATER TREATMENT PLANT

53 ELM STREET, BLACKSTONE,
MASSACHUSETS,01504

Weston & Sampson Engineers, Inc.
55 Walkers Brook Drive, Suite 100
Reading, MA 01867
978.532.1900 800.SAMPSON

www.westonandsampson.com

Consultants:

Revisions:

No.	Date	Description

COA:

©COPYRIGHT ©2021 BY WESTON & SAMPSON
THIS DRAWING HAS BEEN PREPARED FOR THE EXCLUSIVE USE OF THE CLIENT & PROJECT NAME LISTED ON THIS DRAWING ONLY.

REPRODUCTION, RELEASE OF UTILIZATION OF THE DRAWING CONTENT BY OTHER CLIENTS / FIRMS AND ON OTHER PROJECTS IS PROHIBITED BY LAW.

WESTON & SAMPSON RETAINS THE EXCLUSIVE USE OF THE INTELLECTIAL PROPERTY CONTAINED HEREIN.

Seal:

COMMONWEALTH OF MASSACHUSETTS
SCOTT E. HENRIQUES
MECHANICAL
No. 40721
REGISTERED
PROFESSIONAL ENGINEER

Issued For:

BID DOCUMENTS

Scale:

Key Plan:

NORTH

Date:	05/21/2021
Drawn By:	YK
Reviewed By:	SEH
Approved By:	SEH
W&S Project No.:	2200740
W&S File No.:	TBD

Drawing Title:

HVAC NEW BUILDING
FIRST FLOOR PLAN

Sheet Number:

H101A

5/28/2021 10:30:23 AM C:\Users\boodlerl\OneDrive - WESTON & SAMPSON ENGINEERS, Inc\Documents\2200740_Blackstone WTP_HVAC_V20_BoodlerR.rvt

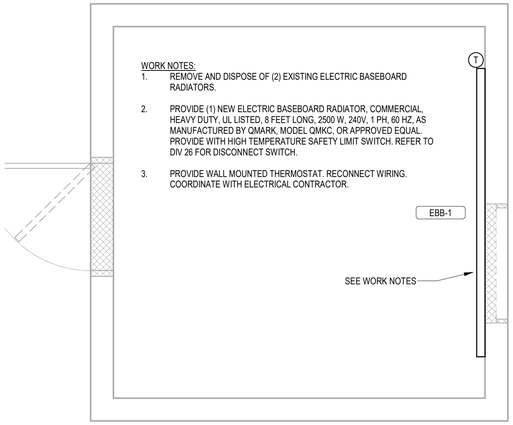

1 H101C ALTERNATE No. 1 - WELL No. 2

1/2" = 1'-0"

0 1' 2' 4'

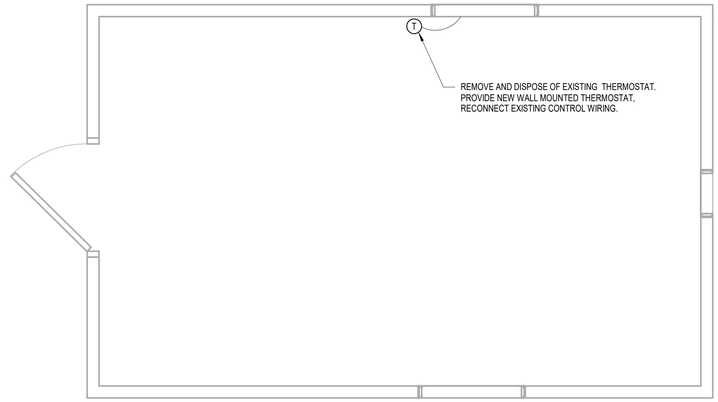

2 H101C ALTERNATE No. 1 - WELL No. 6

1/2" = 1'-0"

0 1' 2' 4'

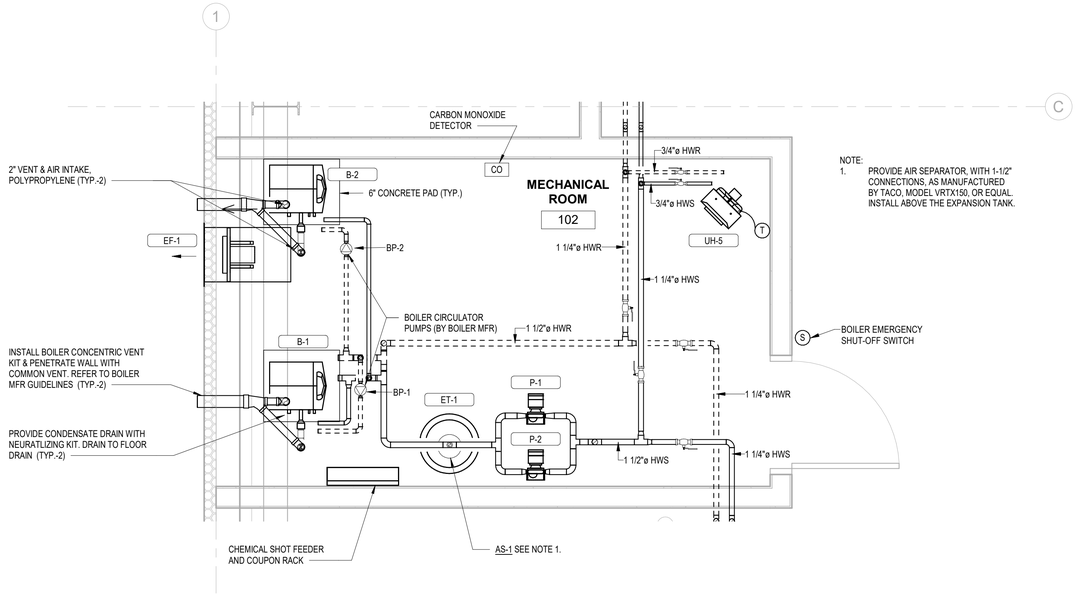

3 H101C NEW BUILDING MECHANICAL ROOM PLAN

1/2" = 1'-0"

0 1' 2' 4'

5/28/2021 10:30:25 AM C:\Users\boodlerl\OneDrive - WESTON & SAMPSON ENGINEERS, Inc\Documents\2200740_Blackstone WTP_HVAC_V20_BoodlerR.rvt

Project:

TOWN OF BLACKSTONE, MASSACHUSETTS DEPARTMENT OF PUBLIC WORKS

WATER TREATMENT PLANT

53 ELM STREET, BLACKSTONE, MASSACHUSETS,01504

Weston & Sampson

Weston & Sampson Engineers, Inc.
55 Walkers Brook Drive, Suite 100
Reading, MA 01867
978.532.1900 800.SAMPSON

www.westonandsampson.com

Consultants:

Revisions:

No.	Date	Description

COA:

"COPYRIGHT ©2021 BY WESTON & SAMPSON
THIS DRAWING HAS BEEN PREPARED FOR THE EXCLUSIVE USE OF THE CLIENT & PROJECT NAME LISTED ON THIS DRAWING ONLY.

REPRODUCTION, RELEASE OF UTILIZATION OF THE DRAWING CONTENT BY OTHER CLIENTS / FIRMS AND ON OTHER PROJECTS IS PROHIBITED BY LAW.

WESTON & SAMPSON RETAINS THE EXCLUSIVE USE OF THE INTELLECTIAL PROPERTY CONTAINED HEREIN.

Seal:

Issued For:

BID DOCUMENTS

Scale:

Key Plan:

Date:	05/21/2021
Drawn By:	Author
Reviewed By:	Checker
Approved By:	Approver
W&S Project No.:	2200740
W&S File No.:	TBD

Drawing Title:

WELL NO. 2 AND 6 HVAC FLOOR PLANS

Sheet Number:

H101C

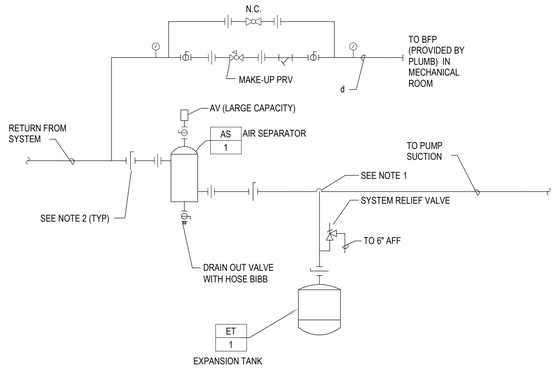

MAKE-UP SIZE (d)		
TOTAL SYSTEM PUMP FLOW (GPM)	d (INCHES)	PRV MIN. FLOW (GPM)
UP TO 200	3/4	3

NOTES:

1. CONNECT TO SIDE OF MAIN TO PREVENT AIR OR DEBRIS FROM ENTERING PIPE TO TANK. TOP OR BOTTOM CONNECTION NOT PERMITTED.

2. PROVIDE BALL VALVES FOR 2" PIPES AND SMALLER (SEE SPECS).

3. FOR HOT WATER SYSTEMS, IF ELEVATION AT INLET TO TANK IS NOT BELOW MAIN BY 24", PROVIDE 24" TRAP TO PREVENT GRAVITY HEATING OF TANK.

1 H501 AIR SEPARATOR AND ET
NOT TO SCALE

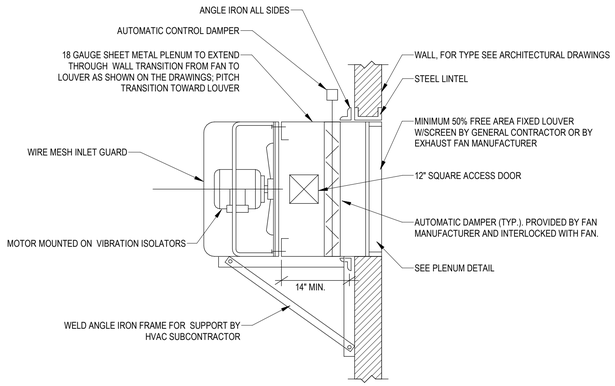

2 H501 PROPELLER FAN DETAIL
NOT TO SCALE

NOTES:
1. ADJUST HANGERS SO PIPE WEIGHT DOES NOT REST ON UNIT HEATER.
2. UNIT HEATERS IN FILTER ROOM DO NOT REQUIRE CONTROL VALVE.

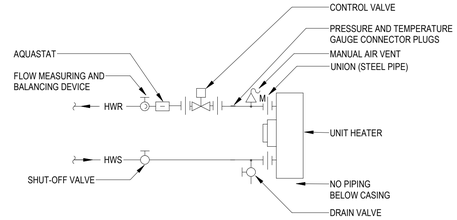

3 H501 HOT WATER UNIT HEATER PIPING DETAIL W/2-WAY VALVE I
NOT TO SCALE

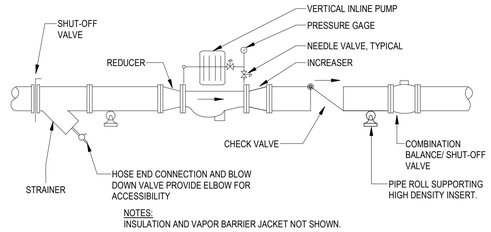

NOTES:
INSULATION AND VAPOR BARRIER JACKET NOT SHOWN.

4 H501 INLINE PUMP PIPING
NOT TO SCALE

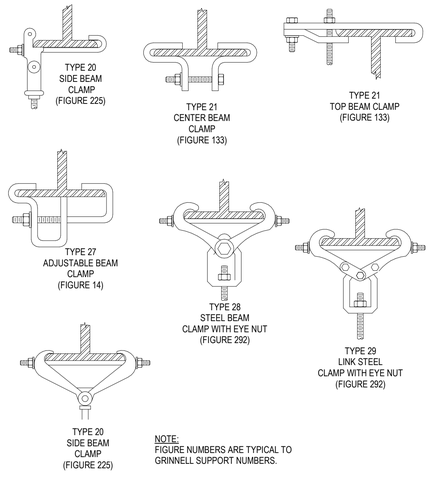

NOTE:
FIGURE NUMBERS ARE TYPICAL TO GRINNELL SUPPORT NUMBERS.

5 H501 BEAM CLAMPS
NOT TO SCALE

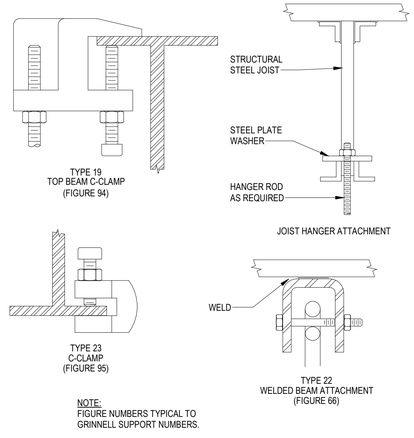

NOTE:
FIGURE NUMBERS TYPICAL TO GRINNELL SUPPORT NUMBERS.

6 H501 C-CLAMPS, JOIST HANGER ROD, AND WELDED BEAM ATTACHMENTS
NOT TO SCALE

HEAVY DUTY CLEVIS HANGER
(FOR PIPING UP TO & INCLUDING 3" PIPE)

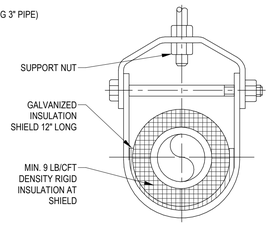

NOTES:
1. SEE SPECIFICATION FOR HANGER SIZES.
2. FOR CHW SERVICE OVER 3", REPLACE SADDLE W/ 12" LONG, 14 GAUGE SHIELD W/ RIGID INSULATION BETWEEN THE PIPE AND SHIELD.

7 H501 PIPE HANGER SUPPORT DETAIL
NOT TO SCALE

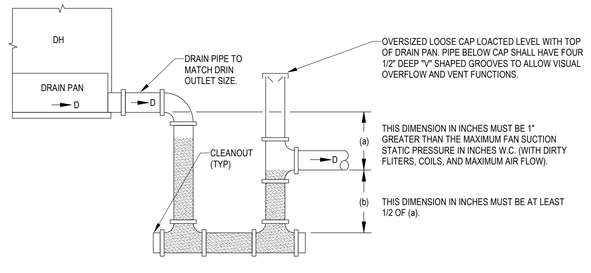

8 H501 DRAW THROUGH UNIT CONDENSATE TRAP DETAIL
NOT TO SCALE

Project:
TOWN OF BLACKSTONE, MASSACHUSETTS DEPARTMENT OF PUBLIC WORKS
WATER TREATMENT PLANT
53 ELM STREET, BLACKSTONE, MASSACHUSETS,01504

Weston & Sampson
Weston & Sampson Engineers, Inc.
55 Walkers Brook Drive, Suite 100
Reading, MA 01867
978.532.1900 800.SAMPSON
www.westonandsampson.com

Consultants:

Revisions:

No.	Date	Description

COA:
"COPYRIGHT ©2021 BY WESTON & SAMPSON
THIS DRAWING HAS BEEN PREPARED FOR THE EXCLUSIVE USE OF THE CLIENT & PROJECT NAME LISTED ON THIS DRAWING ONLY.
REPRODUCTION, RELEASE OF UTILIZATION OF THE DRAWING CONTENT BY OTHER CLIENTS / FIRMS AND ON OTHER PROJECTS IS PROHIBITED BY LAW.
WESTON & SAMPSON RETAINS THE EXCLUSIVE USE OF THE INTELLECTUAL PROPERTY CONTAINED HEREIN.

Seal:
COMMONWEALTH OF MASSACHUSETTS SCOTT E. HENRIQUES MECHANICAL No. 40721 REGISTERED PROFESSIONAL ENGINEER

Issued For:
BID DOCUMENTS

Scale:

Key Plan:

Date:	05/21/2021
Drawn By:	YK
Reviewed By:	SEH
Approved By:	SEH
W&S Project No.:	2200740
W&S File No.:	TBD

Drawing Title:
HVAC DETAILS

Sheet Number:
H501

C:\Users\boodler\OneDrive - WESTON & SAMPSON ENGINEERS, Inc\Documents\2200740_Blackstone WTP_HVAC_V20_Boodler.rvt
5/28/2021 10:30:26 AM

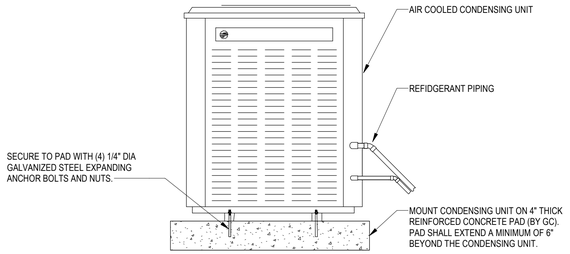

1 H502 CONDENSING UNIT ON CONCRETE PAD DETAIL
NOT TO SCALE

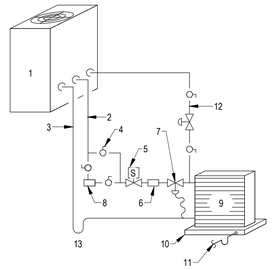

1. CONDENSING UNIT
2. LIQUID LINE
3. INSULATED SUCTION LINE
4. BALL SHUT-OFF VALVES
5. SOLENOID VALVE
6. SIGHT GLASS
7. THERMAL EXPANSION VALVE WITH EQUILIZER LINE
8. FILTER DRYER
9. COOLING COIL
10. DRAIN PAN
11. DRAIN LINE-TRAP & ROUTE TO NEAREST DRAIN
12. HOT GAS BYPASS LINE AND VALVE
13. TRAP

NOTES:
1. PIPING SHOWN IS FOR LEAD CIRCUIT. ADDITIONAL CIRCUITS ARE SIMILAR, EXCEPT NO HOT GAS BYPASS.
2. PIPE SIZING WITH UNIT MANUFACTURER BASED ON ACTUAL FIELD ROUTING.
3. PROVIDE BYPASS CIRCUIT, CONTROL EQUIPMENT, ANY REQUIRED DOUBLE SECTION RISERS TRAPS, AND APPURTENANCES AS RECOMMENDED SIZED AND DIAGRAMMED BY THE UNIT MANUFACTURER AND SUBMITTED, ALONG WITH CALCULATIONS AND SIZING CHARTS FOR ENGINEERS REVIEW.

2 H502 REFRIGERANT PIPING COMPONENT DIAGRAM
NOT TO SCALE

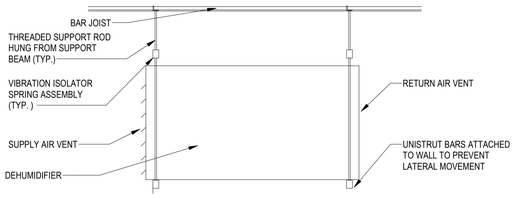

3 H502 DEHUMIDIFIER HANGER SUPPORT DETAIL
NOT TO SCALE

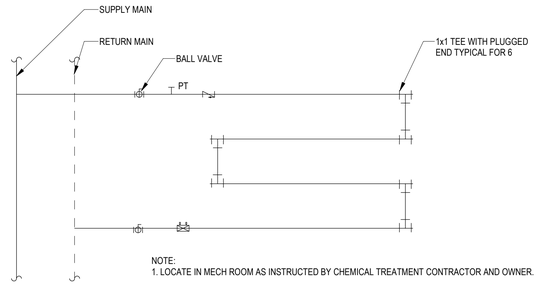

NOTE:
1. LOCATE IN MECH ROOM AS INSTRUCTED BY CHEMICAL TREATMENT CONTRACTOR AND OWNER.

4 H502 COUPON RACK DETAIL
NOT TO SCALE

Project:
TOWN OF BLACKSTONE, MASSACHUSETTS DEPARTMENT OF PUBLIC WORKS

WATER TREATMENT PLANT

53 ELM STREET, BLACKSTONE, MASSACHUSETS,01504

Weston & Sampson Engineers, Inc.
55 Walkers Brook Drive, Suite 100
Reading, MA 01867
978.532.1900 800.SAMPSON

www.westonandsampson.com

Consultants:

Revisions:

No.	Date	Description

COA:

"COPYRIGHT ©2021 BY WESTON & SAMPSON
THIS DRAWING HAS BEEN PREPARED FOR THE EXCLUSIVE USE OF THE CLIENT & PROJECT NAME LISTED ON THIS DRAWING ONLY.

REPRODUCTION, RELEASE OF UTILIZATION OF THE DRAWING CONTENT BY OTHER CLIENTS / FIRMS AND ON OTHER PROJECTS IS PROHIBITED BY LAW.

WESTON & SAMPSON RETAINS THE EXCLUSIVE USE OF THE INTELLECTIAL PROPERTY CONTAINED HEREIN.

Seal:

Issued For:
BID DOCUMENTS

Scale:

Key Plan:

NORTH

Date:	05/21/2021
Drawn By:	YK
Reviewed By:	SEH
Approved By:	SEH
W&S Project No.:	2200740
W&S File No.:	TBD

Drawing Title:
HVAC DETAILS

Sheet Number:
H502

5/28/2021 10:30:26 AM C:\Users\boodler\OneDrive - WESTON & SAMPSON ENGINEERS, Inc\Documents\2200740_Blackstone WTP_HVAC_V20_BoodleR.rvt

DEHUMIDIFIER SCHEDULE

ID	SERIVCE/LOCATION	MANUFACTURER	MODEL	AIRFLOW (CFM)	ESP (in wc)	TSP (in wc)	OUTSIDE AIRFLOW (CFM)	DEHUMIDIFIER CAP. (LBS/HR)	REFRIGERANT	VOLTAGE	PHASE	HZ	FILTER	WEIGHT	REMARKS
DH-1	FILTER ROOM 100	DESERT AIRE	LW-15	6.900	0.05	1.22	0	44	R-407C	460	3	60	MERV 8	2050	1 THROUGH 7

NOTES:
1. REFER TO SPECIFICATIONS, DETAILS, AND CONTROL DIAGRAMS FOR ADDITIONAL INFORMATION.
2. PROVIDE AIR COOLING, UNIT SHALL HAVE REFRIGERANT CONNECTIONS AND BE REMOTE CONDENSER READY.
3. PERFORMANCE IS RATED AT 70° F AND 50% RH.
4. PROVIDE UNIT-MOUNTED POWER DISCONNECT, EIC STARTER, OVERLOAD PROTECTION, REFRIGERANT SWITCH.
5. DEHUMIDIFIER SHALL BE COMPATIBLE WITH OUTDOOR CONDENSING UNIT ACCU-1.
6. PROVIDE STAINLESS STEEL SLOPED DRAIN PAN.
7. PROVIDE MICROPROCESSOR CONTROLLER.

REMOTE AIR COOLED CONDENSING UNIT SCHEDULE

ID	MANUFACTURER	MODEL NO.	COOLING ACTUAL CAP (MBH)	COMPRESSOR REFRIGERANT TYPE	WEIGHT (lb)	ELECTRICAL DATA FLA	MCA	V	PH	REMARKS
ACCU-1	DESERT AIRE	CM3540	154.0	R-407C	390	6	6	460	3	1 THROUGH 6

NOTES:
1. REFER TO SPECIFICATIONS, DETAILS, AND CONTROL DIAGRAMS FOR ADDITIONAL INFORMATION.
2. PROVIDE FACTORY STAND OR CONCRETE PAD.
3. COMPRESSOR SHALL HAVE DC DRIVEN INVERTER TECHNOLOGY, CRANKCASE HEATERS, INTERNAL THERMAL OVERLOAD, AND COMPRESSOR ISOLATION.
4. PROVIDE WITH 1 YEAR COMPLETE UNIT WARRANTY (PARTS AND LABOR) AND 5 YEAR EXTENDED PARTS WARRANTY.
5. CONDENSING UNIT SHALL BE COMPATIBLE WITH DEHUMIDIFIER.
6. PROVIDE POWER DISCONNECT SWITCH.

GAS-FIRED BOILER SCHEDULE

ID	MANUFACTURER	MODEL	GAS-FIRED HEAT EXCHANGER: GAS BURNER INPUT (BTU/H)	CAP (BTU/H)	STAGES	FUEL TYPE	FUEL MIN PRESS (PSI)	WATERSIDE FLOW DESIGN (GPM)	EWT(°F)	LWT(°F)	PD (ftH2O)	VOL (GAL)	THERMAL EFF (%)	UNIT WEIGHT (lb)	FLA	MCA	MOCP	VOLT	PH	REMARKS
B-1	Lochinvar	KHB085N	85000	80750	15	NAT.GAS	4.0	5.4	130	160	0.4	2.2	95	165	3.1	2.7	150.0	120	1	1 THROUGH 11
B-2	Lochinvar	KHB085N	85000	80750	15	NAT.GAS	4.0	5.4	130	160	0.4	2.2	95	165	3.1	2.7	150.0	120	1	1 THROUGH 11

NOTES:
1. REFER TO SPECIFICATIONS, DETAILS, AND CONTROL DIAGRAMS FOR ADDITIONAL INFORMATION.
2. PROVIDE WITH STAINLESS STEEL CONSTRUCTION. PROVIDE BOILER WITH A 10 YEAR WARRANTY ON THE STAINLESS STEEL HEAT EXCHANGER AND 1 YEAR WARRANTY ON REMAINDER OF THE BOILER PARTS.
3. PROVIDE WITH PROBE TYPE LOW WATER CUT-OFF WITH MANUAL RESET, PRESSURE RELIEF VALVE SET AT 75 PSI, HIGH AND LOW GAS PRESSURE SWITCHES WITH MANUAL RESET TEMPERATURE AND PRESSURE GAUGES.
4. PROVIDE WITH FACTORY CONDENSATE TRAP AND CONDENSATE NUETRALIZER KIT.
5. PROVIDE WITH FACTORY OUTDOOR RESET CONTROL AND OUTDOOR AIR TEMPERATURE SENSOR.
6. PROVIDE WITH MANUFACTURER'S CONTROLLER AND ALARM BELL. PROVIDE FACTORY CONTROLLER.
7. PROVIDE WITH FACTORY HIGH TEMPERATURE LIMIT WITH MANUAL RESET, FLOW SWITCH, FLUE TEMPERATURE SENSOR, AND LOW AIR PRESSURE SWITCH.
8. BOILER AND INSTALLTION SHALL COMPLY WITH CSD-1 CODE REQUIREMENTS.
9. PROVIDE AL29-4C OR POLYPROPYLENE FLUE DESIGNED FOR AND APPROVED BY THE SUBMITTED CONDENSING BOILER MANUFACTURER WITH WALL VENT AND COMBUSTION AIR TERMINATIONS.
10. PROVIDE WITH MASSACHUSETTS APPROVED VENTLESS GAS TRAIN. IF NOT MA APPROVED, THE MECHANICAL CONTRACTOR SHALL PROVIDE PAINTED STEEL GAS VENTS AS REQUIRED TO PROPERLY VENT THE GAS TRAIN AT NO ADDITIONAL COST THE OWNER.
11. PROVIDE SINGLE POINT POWER. DISCONNECT BY DIV 26.

UNIT HEATER SCHEDULE

ID	LOCATION	MANUFACTURER	MODEL NO.	TYPE	FAN AIRFLOW (CFM)	MOTOR QTY	MOTOR POWER (HP)	MOTOR RPM	MOTOR ECM	HEATING COIL AIRSIDE CAP (BTU/H)	AIRSIDE EAT(db)(°F)	AIRSIDE LAT(db)(°F)	WATERSIDE FLOW (GPM)	WATERSIDE EWT(°F)	WATERSIDE LWT(°F)	WATERSIDE PD (ftH2O)	VOLT	PH	REMARKS
UH-1	FILTER ROOM 100	Modine	HC 63S	HORIZONTAL	680	1	0.10	1550	Yes	29320	60.0	97.0	2.90	160	130	0.30	120	1	1 THROUGH 5
UH-2	FILTER ROOM 100	Modine	HC 63S	HORIZONTAL	680	1	0.10	1550	Yes	29320	60.0	97.0	2.90	160	130	0.30	120	1	1 THROUGH 5
UH-3	FILTER ROOM 100	Modine	HC 63S	HORIZONTAL	680	1	0.10	1550	Yes	29320	60.0	97.0	2.90	160	130	0.30	120	1	1 THROUGH 5
UH-4	FILTER ROOM 100	Modine	HC 63S	HORIZONTAL	680	1	0.10	1550	Yes	29320	60.0	97.0	2.90	160	130	0.30	120	1	1 THROUGH 5
UH-5	MECH RM 102	Modine	HC 18L	HORIZONTAL	370	1	0.04	1550	Yes	10420	60.0	100.0	1.00	160	130	0.40	120	1	1 THROUGH 5
UH-6	PIPE GALLERY	Modine	HC 18L	HORIZONTAL	340	1	0.02	1550	Yes	7260	60.0	93.0	0.80	160	130	0.30	120	1	1 THROUGH 5
UH-7	EXISTING BLDG	Modine	HC 33S	HORIZONTAL	630	1	0.04	1550	Yes	18600	60.0	91.0	2.30	180	160	0.20	120	1	1 THROUGH 5

NOTES:
1. REFER TO SPECIFICATIONS, DETAILS, AND CONTROL DIAGRAMS FOR ADDITIONAL INFORMATION.
2. PROVIDE ALL FRACTIONAL HP MOTORS WITH INTEGRAL DISCONNECT PREWIRED TO THE UNIT. DISCONNECTING MEANS SHALL BE NEMA RATED AND SUITABLE FOR LOCKING IN THE OFF POSITION.
3. PROVIDE ALL FRACTIONAL HP MOTORS WITH INTEGRAL RESETTABLE THERMAL OVERLOAD.
4. PROVIDE WIRE CAGE FAN GUARD.
5. PROVIDE WITH SPRING HANGING TYP VIBRATION ISOLATION.

ELECTRIC UNIT HEATER SCHEDULE

ID	LOCATION	MANUFACTURER	MODEL NO.	TYPE	FAN AIRFLOW DESIGN	FAN MOTOR QTY	FAN MOTOR POWER (HP)	FAN MOTOR RPM	FAN MOTOR ECM	HEATING COIL AIRSIDE EAT(db)	HEATING COIL AIRSIDE LAT(db)	HEATING ELEMENT QTY	HEATING ELEMENT POWER (KW)	WEIGHT (lb)	FLA	V	PH	REMARKS
EUH-1	ELECTRIC ROOM 103	Modine	HER30	CABINET	380	1	0.03	1600	No	60.0	87.1	1	3	27	14.4	208	1	1 THROUGH 6

NOTES:
1. REFER TO SPECIFICATIONS, DETAILS, AND CONTROL DIAGRAMS FOR ADDITIONAL INFORMATION.
2. PROVIDE WITH INTEGRAL DISCONNECT PREWIRED TO THE UNIT. DISCONNECTING MEANS SHALL BE NEMA RATED AND SUITABLE FOR LOCKING IN THE OFF POSITION.
3. PROVIDE WITH INTEGRAL CONTINUOUS DUTY, AUTOMATIC RESETTING THERMAL OVERLOAD.
4. PROVIDE WIRE CAGE FAN GUARD.
5. PROVIDE LOW-VOLTAGE UNIT MOUNTED THERMOSTAT.
6. PROVIDE WITH SPRING HANGING TYP VIBRATION ISOLATION.

EXHAUST FAN SCHEDULE

ID	LOCATION	MANUFACTURER	MODEL NO.	TYPE	FAN AIRFLOW DESIGN (CFM)	FAN PRESS ESP (IN-WG)	FAN RPM	FAN DRIVE TYPE	MOTOR BHP	MOTOR MOTOR QTY	MOTOR HP	MOTOR ECM	WEIGHT (lb)	V	PH	REMARKS
EF-1	FILTER ROOM 100	Greenheck	SE-1-12-432-VG	SIDEWALL	315	0.25	991	DIRECT	0.25	1	0.05	Yes	27	120	1	1 THROUGH 4
EF-2	ELECTRICAL ROOM	Greenheck	SE-1-10-428-P	SIDEWALL	275	0.25	1650	DIRECT	0.20	1	0.04	Yes	20	120	1	1 THROUGH 4
EF-3	FILTER ROOM 100	Greenheck	SQ-70	IN-LINE	240	0.25	1750	DIRECT	0.17	0	0.04	No	26	120	1	5 THROUGH 8

NOTES:
1. REFER TO SPECIFICATIONS, DETAILS, AND CONTROL DIAGRAMS FOR ADDITIONAL INFORMATION.

SIDEWALL
1. PROVIDE WALL HOUSING WITH BIRD SCREEN.
2. PROVIDE ULTRA LOW LEAKAGE MOTORIZED DAMPER WITH LOW VOLTAGE DAMPER ACTUATOR.
3. PROVIDE WITH ECM TYPE MOTOR WITH MOTOR MOUNTED SPEED CONTROL DIAL.
4. PROVIDE WITH SINGLE POINT POWER AND FACTORY TOGGLE TYPE DISCONNECT SWITCH.

INLINE
5. PROVIDE GALVANIZED STEEL HOUSING WITH BOLTED ACCESS PANELS.
6. PROVIDE FLEXIBLE CONNECTOR BETWEEN EXHAUST FAN AND DUCT CONNECTION.
7. PROVIDE WITH SINGLE POINT POWER AND FACTORY TOGGLE TYPE DISCONNECT SWITCH.
8. PROVIDE HANGING SPRING TYPE VIBRATION ISOLATION.

PUMP SCHEDULE

ID	MANUFACTURER	MODEL NO.	TYPE	DESIGN TEMP. (°F)	PUMP FLOW DESIGN (GPM)	PUMP HEAD (FT)	MOTOR WATT	MOTOR ECM	UNIT WEIGHT (lb)	V	PH	REMARKS
P-1	Grundfos	MAGNA3 32-100 F	IN-LINE CIRCULATOR	200	15.0	20.0	178.00	Yes	17	115	1	1 THROUGH 3
P-2	Grundfos	MAGNA3 32-100 F	IN-LINE CIRCULATOR	200	15.0	20.0	178.00	Yes	17	115	1	1 THROUGH 3

NOTES:
1. REFER TO SPECIFICATIONS, DETAILS, AND CONTROL DIAGRAMS FOR ADDITIONAL INFORMATION.
2. PROVIDE PREMIUM EFFICIENCY ECM TYPE MOTOR WITH INTEGRAL CONTROLS AND THERMAL AND OVERCURRENT PROTECTION. PROVIDE WITH STAINLESS STEEL IMPELLOR AND SHAFT.
3. REFER TO DIV 26 FOR DISCONNECT SWITCH.

EXPANSION TANK SCHEDULE

ID	LOCATION	MANUFACTURER	MODEL NO.	TYPE	VOLUME TANK	UNIT DIMENSIONS HEIGHT	UNIT DIMENSIONS DIAMETER	MAX WORKING PRESURE (PSIG)	WEIGHT (lb)	REMARKS
ET-1	MECH ROOM 102	TACO	CA-90	BLADDER	23.0	30"	16"	125	120	1, 2

NOTES:
1. REFER TO SPECIFICATIONS, DETAILS, AND CONTROL DIAGRAMS FOR ADDITIONAL INFORMATION.
2. TANK SHALL BE ASME RATED

PIPE INSULATION (2015 IECC AND ASHRAE 90.1 2013 COMPLIANCE)

PIPING SYSTEM TYPES	FLUID TEMPERATURE RANGE (°F)	MINIMUM INSULATION THICKNESS IN INCHES FOR INDOOR PIPE SIZES (SEE NOTES BELOW) <1"	1" & 1-1/4"	1-1/2" - 3"	K-FACTOR (BTU-INCH/°F-HR-SF) AT AVG TEMPERATURE (°F)
LOW TEMPERATURE HEATING	141-200	1.5	1.5	2	0.25-0.29 @ 125°F
FULLY CONDENSING BOILERS	105-140	1	1	1.5	0.22-0.28 @ 100°F
REFRIGERANT OR COOLING COIL CONDENSATE DRAIN	<60	0.5	1	1	0.20-0.27 @ 75°F

NOTES:
1. REFER TO SPECIFICATIONS AND DETAILS FOR ADDITIONAL INFORMATION.
2. FOR MINIMUM THICKNESS OF ALTERNATIVE INSULATION TYPES OUTSIDE THE STATED CONDUCTIVITY RANGE, SEE TEST METHOD FOR STEADY STATE HEAT TRANSFER PROPERTIES OF HORIZONTAL PIPE INSULATIONS, ASTM C 335-95, AND THE STATE ENERGY CODE.
3. FOR DUAL TEMPERATURE SYSTEMS (HEATING AND COOLING) USE THE THICKER INSULATION VALUE REQUIRED FOR EITHER HEATING OR COOLING AND PROVIDE VAPOR BARRIER JACKET.
4. ALL OUTDOOR REFRIGERANT PIPING SHALL BE PROVIDED WITH 3/4" THICK INSULATION WITH PVC JACKETING.

Project:
TOWN OF BLACKSTONE, MASSACHUSETTS DEPARTMENT OF PUBLIC WORKS

WATER TREATMENT PLANT

53 ELM STREET, BLACKSTONE, MASSACHUSETS,01504

Weston & Sampson

Weston & Sampson Engineers, Inc.
55 Walkers Brook Drive, Suite 100
Reading, MA 01867
978.532.1900 800.SAMPSON

www.westonandsampson.com

Consultants:

Revisions:

No.	Date	Description

COA:

"COPYRIGHT ©2021 BY WESTON & SAMPSON
THIS DRAWING HAS BEEN PREPARED FOR THE EXCLUSIVE USE OF THE CLIENT & PROJECT NAME LISTED ON THIS DRAWING ONLY.

REPRODUCTION, RELEASE OF UTILIZATION OF THE DRAWING CONTENT BY OTHER CLIENTS / FIRMS AND ON OTHER PROJECTS IS PROHIBITED BY LAW.

WESTON & SAMPSON RETAINS THE EXCLUSIVE USE OF THE INTELLECTUAL PROPERTY CONTAINED HEREIN.

Seal:

Issued For:
BID DOCUMENTS

Scale:

Key Plan:

Date:	05/21/2021
Drawn By:	YK
Reviewed By:	SEH
Approved By:	SEH
W&S Project No.:	2200740
W&S File No.:	TBD

Drawing Title:
HVAC SCHEDULES

Sheet Number:
H601

C:\Users\boodlerl\OneDrive - WESTON & SAMPSON ENGINEERS, Inc\Documents\2200740_Blackstone WTP_HVAC_V20_BoodlerR.rvt
5/28/2021 10:30:28 AM

CONTROL POINT DESCRIPTOR LEGEND

TAG	ATC CONTRACTOR PROVIDED DDC POINT AND HARDWARE
TAG	CONTROL DEVICE FURNISHED BY ELECTRICAL OR PLUMBING CONTRACTOR BUT INTERFACED TO DDC SYSTEM BY ATC CONTRACTOR (ELEC SHOWN)
TAG	ATC CONTRACTOR INTERFACE TO EQUIPMENT MANUFACTURER'S HARDWARE
TAG	ATC CONTRACTOR PROVIDED LOCAL CONTROL POINT

CONTROL ABBREVIATIONS

ACD	AUTOMATIC CONTROL DAMPER
ACV	AUTOMATIC CONTROL VALVE
AFMS	AIR FLOW MEASURING STATION
ALM	ALARM
ATC	AUTOMATIC TEMPERATURE CONTROL
AQS	AQUASTAT
BCV	BASEBOARD CONTROL VALVE
BDD	BACKDRAFT DAMPER W/ ADJ COUNTERWEIGHT
BV	BYPASS VALVE
C	CARBON DIOXIDE SENSOR
CAP	CAPACITY CONTROL
CCLT	COOLING COIL LEAVING AIR TEMP SENSOR
CLT	COIL LAT SENSOR
CHRT	CHILLED WATER RETURN TEMP SENSOR
CHST	CHILLED WATER SUPPLY TEMP SENSOR
CHWRT	CHILLED WATER RESET TEMPERATURE
CO	CARBON MONOXIDE SENSOR
CRT	CONDENSER WATER RET TEMP SENSOR
CST	CONDENSER WATER SUP TEMP SENSOR
CT	CURRENT TRANSFORMER (STATUS FEEDBACK)
CV	COOLING COIL CONTROL VALVE
DAT	DISCHARGE AIR TEMPERATURE SENSOR
DDC	DIRECT DIGITAL CONTROL
DDCFP	DIFFERENTIAL PRESSURE SWITCH
DL	DEMAND LIMIT
DPS	DEIFFERENTIAL PRESSURE SWITCH
DPT	DIFFERENTIAL PRESSURE SENSOR/TRANSMITTER
DPV	DIFFERENTIAL PRESSURE BYPASS VALVE
DSP	DISCHARGE STATIC PRESSURE SENSOR
EAD	EXHAUST AIR DAMPER
EAT	ENTERING AIR TEMPERATURE
ECM	ELECTRONICALLY COMMUTATED MOTOR
ERW	ENERGY RECOVERY WHEEL
ES	END SWITCH
FA	FAULT ALARM
FDPS	FILTER DIFFERENTIAL PRESSURE SWITCH
FMT	FLOW METER/TRANSMITTER
FS	FLOW SWITCH
FZ	FREEZESTAT
H	RELATIVE HUMIDITY SENSOR
HCV	HEATING COIL CONTROL VALVE
HCLT	HEATING COIL LEAVING AIR TEMP SENSOR
HE	HIGH EFFICIENCY
HEGA	HE GAS ABSORBER FILTER
HEPA	HE PARTICULATE AIR FILTER
HGB	HOT GAS BYPASS
HHL	HIGH HUMIDITY LIMIT SENSOR
HLH	HIGH/LOW HUMIDITY LIMIT SENSOR
HOA	HANDS-OFF AUTOMATIC SWITCH
HS	HAND SWITCH
HPS	HIGH LIMIT PRESSURE SENSOR
HSPS	HIGH STATIC PRESSURE SWITCH
HV	HEATING CONTROL VALVE
HWRT	HOT WATER RETURN TEMP SENSOR
HWST	HOT WATER SUPPLY TEMP SENSOR
IFBD	INEGRAL FACE AND BYPASS
IGV	INLET GUIDE VANES
LAT	LEAVING AIR TEMP SENSOR
LEL	LOW EXPLOSIVE LIMIT
LLSV	LIQUID LINE SOLENOID VALVE
LSPS	LOW STATIC PRESSURE SWITCH
LS	LEVEL SENSOR
LSI	LIGHT SWICH INTERFACE
LSHA	LEVEL SENSOR HIGH ALARM
LSHS	LEVEL SENSOR HIGH SWITCH
LSLA	LEVEL SENSOR LOW ALARM
LSLS	LEVEL SENSOR LOW SWITCH
MAT	MIXED AIR TEMP SENSOR
MUWW	MAKE-UP WATER VALVE
MD	MOTION DETECTOR
NC	NORMALLY CLOSED (ON LOSS OF POWER)
NO	NORMALLY OPEN (ON LOSS OF POWER)
NO2	NITROGEN DIOXIDE SENSOR
OAD	OUTSIDE AIR DAMPER
OAH	OUTSIDE AIR HUMIDITY SENSOR (WB)
OAT	OUTSIDE AIR TEMPERATURE SENSOR (DB)
PAD	PRIMARY AIR DAMPER
PIACV	PRESSURE INDEPENDANT ACV
PPM	PARTS PER MILLION
PR	PRESSURE SENSOR
PROP	PROPANE SENSOR
RAD	RETURN AIR DAMPER
RAH	RETURN AIR HUMIDITY SENSOR
RAT	RETURN AIR TEMPERATURE SENSOR
RV	REHEAT CONTROL VALVE
RH	RELATIVE HUMIDITY
RI	RUN INDICATOR
RSID	RETURN SMOKE ISOLATION DAMPER
S	SWITCH
SAD	SUPPLY AIR DAMPER
SD	SMOKE DAMPER
SDET	SMOKE DETECTOR
SFT	SMOKE/FIRE DETECTOR
SP	STATIC PRESSURE SENSOR
SPD	SPEED CONTROL
S/S	START/STOP
S/SH	START/STOP HIGH SPEED/CAPACITY
S/SL	START/STOP LOW SPEED/CAPACITY
SSID	SUPPLY SMOKE ISOLATION DAMPER
SSP	SUCTION STATIC PRESSURE SENSOR
T	THERMOSTAT
TAD	TRANSFER AIR DAMPER
TS	TEMPERATURE SENSOR
VFD	VARIABLE FREQUENCY DRIVE
VFDS	VFD SPEED
VFDO	VFD OUTPUT (FEEDBACK)
VS	VIBRATION SWITCH

GENERAL ATC NOTES

1. ON-SITE TRAINING SHALL ALSO INCLUDE A MINIMUM OF 8 HOURS OF HANDS ON INSTRUCTION GEARED TOWARD OPERATION AND MAINTENANCE OF THE SYSTEMS, PRIOR TO TRAINING, THE NECESSARY LESSON PLANS, TRAINING DOCUMENTS, HANDOUTS, ETC. SHALL BE PROVIDED WITH THE CURRICULUM OUTLINED.
2. ALL TRAINING SHALL BE RECORDED AND COPIED TO DVD BY THE ATC CONTRACTOR. THREE COPIES OF THE RECORDED SESSIONS SHALL BE SUBMITTED TO THE OWNER FOR THEIR USE.
3. PROVIDE WIRING FROM ELECTRICAL SOURCE TO MISCELLANEOUS ATC DEVICES. REFER TO HVAC PLANS, HVAC MECHANICAL ROOM PLANS, AND ELECTRICAL PLANS FOR LOCATION OF POWER SOURCES FOR ATC SYSTEM.
4. PROVIDE DEMOLITION OF EXISTING CONTROL COMPONENTS WHICH ARE BEING REPLACED BY THE NEW ATC CONTROL SYSTEM.
5. LOCATION OF ALL NEW DDC CONTROL PANELS SHALL BE FIELD VERIFIED WITH THE EXISTING CONDITIONS BY THE CONTRACTOR.
6. ALL ATC CONTROLS SHALL BE HARDWIRED. NO WIRELESS TECHNOLOGY SHALL BE ALLOWED. ALL EXPOSED WIRING IN THE SHOPS, MAINTENANCE OR STORAGE AREAS SHALL BE INSTALLED IN MINIMUM 1/2 INCH GALVANIZED EMT CONDUIT.
7. INSTALL ALL NEW CONTROL WIRING FOR OFFICES AND OTHER SIMILAR OCCUPIED SPACES IN THE WALLS. WHERE WIRING WOULD BE EXPOSED IN THESE AREAS, THE WIRING SHALL BE INSTALLED IN WIRE MOLD.

DIAGRAM EQUIPMENT SYMBOLS

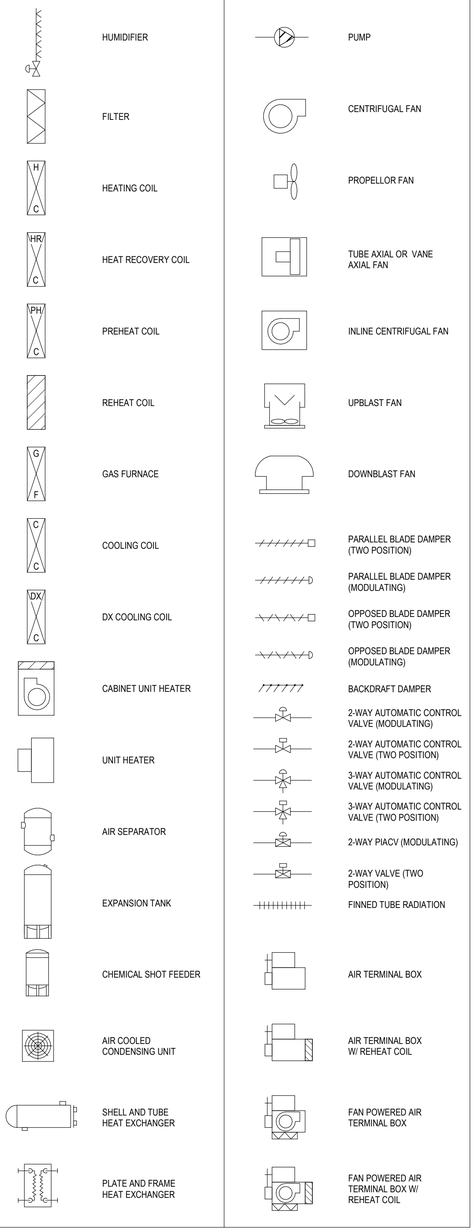

NOTE: SOME OR ALL SYMBOLS MAY BE USED ON THIS PROJECT

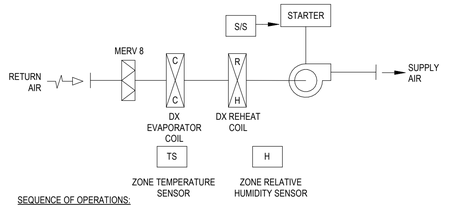

SEQUENCE OF OPERATIONS:

1. THE DEHUMIDIFIER SHALL OPERATE UPON A RISE IN THE SPACE DEWPOINT TEMPERATURE ABOVE 42°F (ADJ). THE DEHUMIDIFIER SHALL RUN CONTINUOUSLY UNTIL THE SPACE DEWPOINT TEMPERATURE SETPOINT IS SATISFIED.
2. THE DEHUMIDIFIER SHALL OPERATE IN COOLING MODE WHEN THE SPACE DRY BULB TEMPERATURE RISES ABOVE 80°F (ADJ). IN THIS MODE THE CONTROLLER WILL SHIFT THE DEHUMIDIFIER FROM THE REHEAT MODE AND REJECT ALL ENERGY TO THE REMOTE CONDENSER TO PROVIDE SENSIBLE COOLING TO THE SPACE.

DEHUMIDIFIER

EF-1 & EF-2

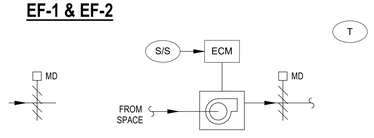

EXHAUST FAN CONTROLS:

GENERAL
1. THE EXHAUST FAN SHALL BE STARTED AND STOPPED VIA TEMPERATURE SENSOR.
2. ALL TEMPERATURES LISTED ARE FAHRENHEIT. ALL SETPOINTS ARE ADJUSTABLE.

FAN CONTROL
1. THE FAN SHALL BE DE-ENERGIZED. INTAKE AND EXHAUST DAMPERS SHALL BE CLOSED. UPON A RISE IN SPACE TEMPERATURE ABOVE THE SETPOINT OF 80°F (ADJ), DAMPERS SHALL OPEN, AND THE FAN SHALL BE ENERGIZED.
2. THE OPPOSITE SHALL OCCUR ON A DROP IN SPACE TEMPERATURE BELOW 75°F (ADJ).
3. TEMPERATURE SENSOR SHALL HAVE ON-OFF MANUAL OVERRIDE, AND MAINTAIN THIS SETTING FOR 30 MINUTES (ADJ.). AFTER SET TIME, REGULAR SCHEDULE SHALL RESUME.

ALARMS
1. IF THE ROOM TEMPERATURE FALLS BELOW 40°F (ADJ) OR ABOVE 95°F (ADJ) FOR 10 MINUTES (ADJ) OR LONGER, SEND A DETAILED ALARM TO THE SCADA.

EXHAUST FANS

EF-3

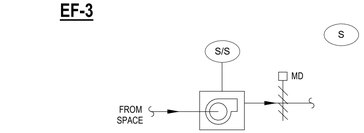

EXHAUST FAN CONTROLS:

1. THE EXHAUST FAN SHALL BE STARTED AND STOPPED FROM WALL MOUNTED MANUAL ON-OFF SWITCH WITH TIME OVERRIDE.
2. WHEN SWITCH IS OFF FAN SHALL BE DE-ENERGIZED. WHEN SWITCH IS ON, FAN SHALL START AND RUN FOR 30 MINUTES (ADJ.). WHEN SET TIME IS EXPIRED, THE FAN SHALL TURN OFF.

EXHAUST FAN - PIPE GALLERY

UNIT HEATER CONTROLS:

GENERAL
1. UNIT HEATER SHALL BE STARTED AND STOPPED VIA LINE VOLTAGE ELECTRONIC THERMOSTAT.
2. ALL SETPOINTS SHALL BE ADJUSTABLE.
3. ALL TEMPERATURES LISTED ARE IN FAHRENHEIT.

CONTROL SEQUENCE
1. THE UNIT HEATER FAN SHALL BE DE-ENERGIZED. UPON A DROP IN SPACE TEMPERATURE BELOW THE SETPOINT OF 60°F (ADJ), THE HEATER SHALL BE ENERGIZED.
2. THE OPPOSITE SHALL OCCUR ON A RISE IN SPACE TEMPERATURE ABOVE 62°F (ADJ).

ELECTRIC UNIT HEATER (EUH-1)

UH-1

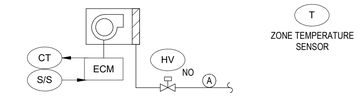

UNIT HEATER CONTROLS:

GENERAL
1. UNIT HEATER SHALL BE STARTED AND STOPPED VIA DDC CONTROLLER.
2. ALL SETPOINTS SHALL BE ADJUSTABLE.
3. MOTOR RATED RELAYS SHALL BE PROVIDED TO INTERFACE MANUAL MOTOR STARTER WITH CONTROL WIRING TO SATISFY CONTROL SEQUENCE.
4. ALL TEMPERATURES LISTED ARE IN FAHRENHEIT.

CONTROL SEQUENCE
1. THE UNIT HEATER FAN SHALL BE DE-ENERGIZED. UPON A DROP IN SPACE TEMPERATURE BELOW THE SETPOINT OF 60°F (ADJ), THE CONTROL VALVE (HV) SHALL OPEN AND FLOW SHALL BE PROVEN BY THE AQUASTAT PRIOR TO THE FAN BEING ENERGIZED.
2. THE OPPOSITE SHALL OCCUR ON A RISE IN SPACE TEMPERATURE ABOVE 62°F (ADJ).

ALARMS
1. IF THE ROOM TEMPERATURE FALLS BELOW 50°F (ADJ) FOR 10 MINUTES (ADJ) OR LONGER, THE DDC CONTROLLER SHALL GIVE A DETAILED ALARM SIGNAL TO THE OPERATOR WORKSTATION.

UNIT HEATER CONTROL SEQUENCE

Project:
TOWN OF BLACKSTONE, MASSACHUSETTS DEPARTMENT OF PUBLIC WORKS
WATER TREATMENT PLANT
53 ELM STREET, BLACKSTONE, MASSACHUSETS,01504

Weston & Sampson
Weston & Sampson Engineers, Inc.
55 Walkers Brook Drive, Suite 100
Reading, MA 01867
978.532.1900 800.SAMPSON
www.westonandsampson.com

Consultants:

Revisions:

No.	Date	Description

COA:
"COPYRIGHT ©2021 BY WESTON & SAMPSON
THIS DRAWING HAS BEEN PREPARED FOR THE EXCLUSIVE USE OF THE CLIENT & PROJECT NAME LISTED ON THIS DRAWING ONLY.
REPRODUCTION, RELEASE OF UTILIZATION OF THE DRAWING CONTENT BY OTHER CLIENTS / FIRMS AND ON OTHER PROJECTS IS PROHIBITED BY LAW.
WESTON & SAMPSON RETAINS THE EXCLUSIVE USE OF THE INTELLECTUAL PROPERTY CONTAINED HEREIN.

Seal:
COMMONWEALTH OF MASSACHUSETTS
SCOTT E. HENRIQUES
MECHANICAL
No. 40721
REGISTERED PROFESSIONAL ENGINEER

Issued For:
BID DOCUMENTS

Scale:

Key Plan:

Date:	05/21/2021
Drawn By:	YK
Reviewed By:	SEH
Approved By:	SEH
W&S Project No.:	2200740
W&S File No.:	TBD

Drawing Title:
MECHANICAL AUTOMATIC TEMPERATURE CONTROLS

Sheet Number:
H701

5/28/2021 10:30:28 AM C:\Users\boodlerk\OneDrive - WESTON & SAMPSON ENGINEERS, Inc\Documents\2200740_Blackstone WTP_HVAC_V20_BoodlerR.rvt

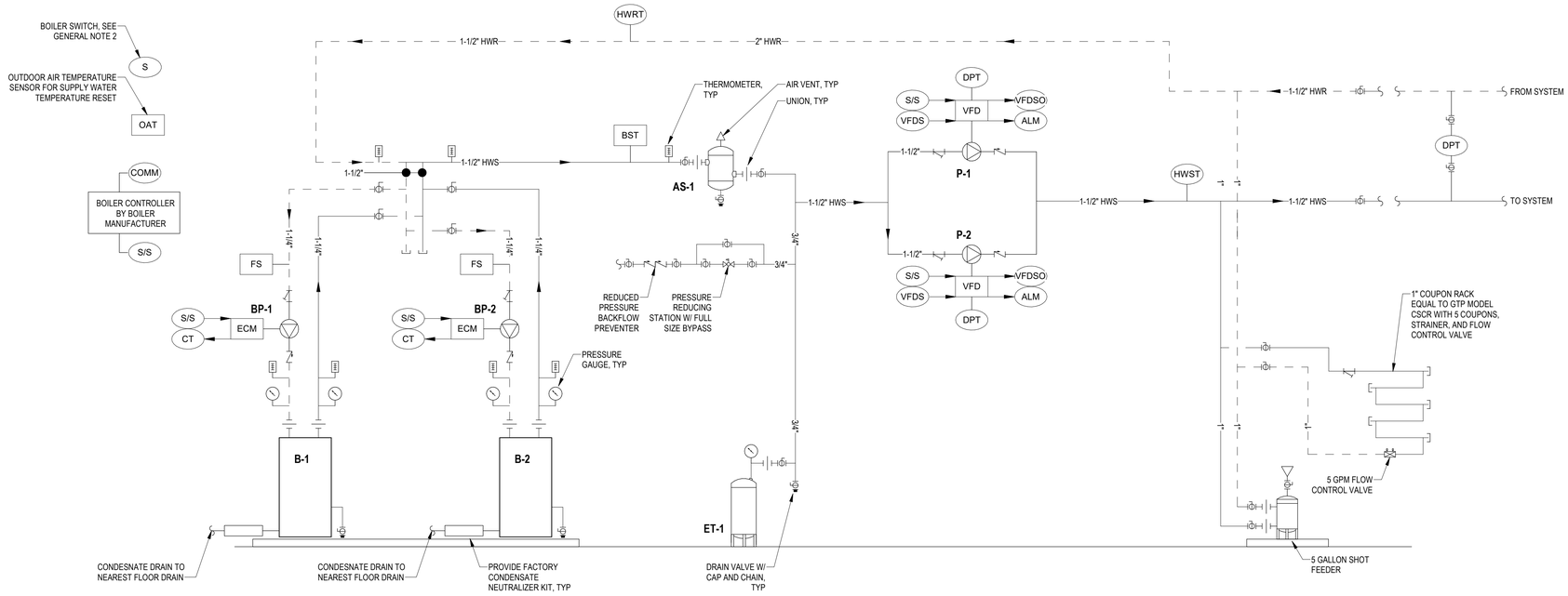

GENERAL

1. THE BOILER PLANT CONSISTS OF TWO HIGH EFFICIENCY CONDENSING BOILERS, TWO BOILER PUMPS, TWO VARIABLE VOLUME SYSTEM PUMPS, A 3-WAY VALVE, AND ASSOCIATED APPURTENANCES.
2. BOILERS B-1 AND B-2 ALONG WITH THEIR ASSOCIATED BOILER PUMPS AND SECONDARY P-1 & P-2 PUMPS SHALL BE CONTROLLED BY THE BOILER MANUFACTURER'S INTEGRAL PACKAGED CONTROLLER (BPC) AND INTERFACED TO THE BAS.
3. ALL TEMPERATURES ARE IN FAHRENHEIT AND ALL SET POINTS SHALL BE ADJUSTABLE.
4. PROVIDE SENSORS SHOWN AND COORDINATE ALL SENSOR INSTALLATION LOCATIONS WITH THE MECHANICAL CONTRACTOR AND THE EQUIPMENT MANUFACTURER.
5. PROVIDE INDIVIDUAL GRAPHICS OF EACH SYSTEM (PUMPS P-1, P-2, BP-1, BP-2, BOILERS, ETC.) WITH REAL TIME UPDATING OF CONDITIONS (STATUS, TEMPERATURES, ETC.)

BOILER OPERATION

1. THE BOILER SYSTEM SHALL BE ENABLED WHEN THE OAT DROPS BELOW 65°F (ADJ) FOR MORE THAN 15 MINUTES (ADJ) OR IF REHEAT IS REQUIRED IN ANY ZONE. THE BOILERS SHALL BE AUTOMATICALLY STARTED AND STOPPED VIA THE LEAD BOILER'S CONTROL PANEL. THE BOILER SYSTEM SHALL BE DISABLED WHEN OAT RISES ABOVE 67°F (ADJ) FOR MORE THAN 15 MINUTES (ADJ) OR IF NO REHEAT IS REQUIRED.
2. THE HOT WATER SUPPLY TEMPERATURE SHALL BE 160°F. THE HOT WATER RETURN TEMPERATURE SHALL BE 130°F (ADJ).
3. THE HOT WATER SUPPLY TEMPERATURE SHALL BE RESET LINEARLY BETWEEN 90°F AND 180°F DEPENDENT UPON THE OUTDOOR AIR TEMPERATURE (60°F AND -10°F RESPECTIVELY). THE OUTDOOR RESET SCHEDULE SHALL BE FULLY ADJUSTABLE.
4. PROVIDE PRESSURE DIFFERENTIAL SENSORS/TRANSMITTER (DPS) FOR EACH PUMP FOR STATUS AND RUN TIME MONITORING VIA THE DDC SYSTEM.
5. HOT WATER HEATING LOAD (BTU/H) SHALL BE CALCULATED USING THE SECONDARY HOT WATER FLOW AND THE SUPPLY AND RETURN TEMPERATURES. PROVIDE A READ OUT AT THE OPERATOR WORKSTATION.

BOILER PUMP OPERATION

1. START/STOP: THE HOT WATER BOILERS PUMPS SHALL BE ENERGIZED VIA THE ASSOCIATED BOILER THROUGH THE BOILER CONTROL. THE BOILER PUMPS SHALL PROVE ON BY THE RESPECTIVE BOILER'S FLOW SWITCH BEFORE THE BOILER STARTS.
2. THE BPC SHALL DETERMINE THE OPTIMAL NUMBER OF BOILERS AND FIRING RATE TO MOST EFFICIENTLY MEET THE SUPPLY TEMPERATURE REQUIRED AT THE HOT WATER SUPPLY TEMPERATURE SENSOR (HWST). THE LEAD BOILER'S CONTROLLER SHALL START AND OPERATE THE LAG BOILER WHEN NEEDED TO MAINTAIN EITHER THE SYSTEM SUPPLY TEMPERATURE OR WHEN THE SYSTEM WOULD OPERATE MORE EFFICIENTLY WITH MORE BOILERS.
3. THE SPEED OF EACH BOILER'S ASSOCIATED BOILER PUMP SHALL BE CONTROLLED BY THE BPC. THE PUMP SHALL NORMALLY RUN AT THE SCHEDULED FLOW RATE. ONCE THE BOILERS HAVE REACHED THEIR MINIMUM FIRING RATE, THE BOILER CONTROLLER SHALL REDUCE THE SPEED OF THE BOILER PUMP IN ORDER TO MAINTAIN DELTA T ACROSS THE BOILER. REFER TO BOILER MANUFACTURER'S INSTALLATION MANUAL.
4. WHEN THE BOILER IS COMMANDED OFF BY THE BPC, IT SHALL BE DE-ENERGIZED AND THE ASSOCIATED BOILER PUMP SHALL BE DE-ENERGIZED.

BOILER STAGING AND ROTATION

1. EFFICIENCY OPTIMIZED PLAND SEQUENCING (PARALLEL):
   A. A SINGLE BOILER OF THE PLANT IS ENERGIZED VIA THE BOILER ONBOARD STAGING CONTROL (SMART SYSTEM CONTROL, NOTED AS BPC), AND PROGRAMMED AS EFFICIENCY OPTIMIZED MODE.
   B. RESPECTIVE BOILER TO FIRE AT REQUIRED MODULATION TO MAINTAIN SET POINT, ALLOWED TO RUN THE PROGRAMMED FIRING RATE FOR STAGE ON OF NEXT BOILER (TO BE FIELD PROGRAMMED FOR 50%).
   C. IF RATE OF (1) BOILER AT 50% FIRING RATE CANNOT SATISFY THE HEAT DEMAND, THE SECOND BOILER IS STAGED ON.
   D. RESPECTIVE (2) BOILERS TO FIRE AT THE REQUIRED MODULATION (IN UNISON) TO MAINTAIN SET POINT, AND RUN TO 50% FIRING RATE EACH.
   E. IF RATE OF (2) BOILERS AT 50% FIRING RATE CANNOT SATISFY THE HEAT DEMAND, BOTH BOILERS SHALL FIRE IN UNISON TO MAINTAIN SETPOINT AND RUN TO FULL FIRE IF REQUIRED.
2. ROTATION (OCCURS EVERY 24 HOURS):
   A. WEEK 1 - BOILER 1 IS ENERGIZED FIRST, THEN BOILER 2.
   B. WEEK 2 - BOILER 2 IS ENERGIZED FIRST, THEN BOILER 1.
   C. WEEK 3 - WEEK 1 CYCLE STARTS.

HOT WATER PUMP OPERATION (P-1 & P-2)

1. START/STOP: THE HOT WATER PUMP SHALL BE ENERGIZED AND PROVE FLOW PRIOR TO ENERGIZING THE BPC FOR A CALL FOR HEAT. ONCE A PUMP IS ENERGIZED, IF FLOW IS NOT ESTABLISHED AS SENSED BY A DIFFERENTIAL PRESSURE SENSOR, THE LEAD PUMP SHALL BE DE-ENERGIZED AND THE STAND-BY PUMP SHALL BE ENERGIZED. ALARM AT BPC. LEAD PUMP OPERATION SHALL BE AUTOMATICALLY ROTATED EVERY 48 HOURS (ADJ). BPC SHALL ALSO HAVE THE CAPABILITY OF SELECTING THE LEAD PUMP FROM THE OPERATOR'S WORSTATION.
2. WHENEVER THE LEAD PUMP (P-1 OR P-2) IS ENERGIZED, THE BOILER HOT WATER SUPPLY TEMPERATURE AT (HWST) SHALL BE MAINTAINED BY STAGING AND MODULATING THE BOILERS.
3. PUMP VARIABLE FREQUENCY DRIVE (VFD) CONTROL: THE VFD SPEED OF THE LEAD PUMP SHALL BE DETERMINED BY A DIFFERENTIAL PRESSURE SENSOR LOCATED REMOTE TO THE BOILER ROOM. THE MINIMUM FLOW BYPASS (BV) SHALL MODULATE OPEN AS REQUIRED TO MAINTAIN MINIMUM PUMP SPEED. THE CONTRACTOR SHALL COORDINATE WITH THE BALANCING CONTRACTOR TO DETERMINE THE APPROPRIATE SET POINTS.

SAFETIES AND MONITORING

1. CONNECT BOILER PLANT SAFETIES POINTS AND ALARMS TO THE SCADA.
2. THE FOLLOWING EVENTS SHALL CAUSE AN ALARM TO BE SIGNALED AT THE BAS FRONT END:
   A. ANY ALARM GENERATED AT THE BOILER CONTROL PANEL.
   B. PUMP OR VFD FAILURE.
   C. EMERGENCY GAS SHUT-OFF.
   D. CARBON MONOXIDE DETECTOR ALARM.
3. PROVIDE FIREOMATIC THERMAL SAFETY SWITCHES AT EACH BURNER. REFER TO ELECTRICAL DRAWINGS.
4. PROVIDE BOILER SHUT-OFF SWITCHES AT EACH BOILER ROOM ENTRANCE. REFER TO ELECTRICAL DRAWINGS. PROVIDE AND INSTALL SOLENOID VALVES IF NOT PROVIDED AS PART OF THE BOILERS GAS TRAIN. ALARM BPC SYSTEM UPON ACTIVATION.

GENERAL NOTES

1. PVC CONDENSATE NEUTRALIZING TANK WITH MARBLE CHIPS SHALL BE PROVIDED BY BOILER MANUFACTURER.
2. BOILER EMERGENCY GAS SHUT-OFF SWITCH. LOCATE AT EACH ENTRANCE TO BOILER ROOM. INSTALL SWITCH OUTSIDE OF BOILER ROOM DOOR IN TAMPER PROOF ENCLOSURE.
3. DISTANCE BETWEEN RETURN AND SUPPLY BRANCHES FOR HYDRAULIC DECOUPLER SHALL NOT EXCEED 4 PIPE DIAMETERS OR MAX OF 12" APART. REFER TO BOILER MANUFACTURER REQUIREMENTS.
4. SEE EQUIPMENT DETAILS FOR ADDITIONAL COMPONENTS.
5. CONTRACTOR SHALL CLEAN AND FLUSH ALL HEATING HOT WATER PIPING AND DRAIN TO WASTE UNTIL THE RETURN IS CLEAR OF ANY DEBRIS AND RUST.

HEATING HOT WATER SYSTEM

5/28/2021 10:30:29 AM C:\Users\boodler\OneDrive - WESTON & SAMPSON ENGINEERS, Inc\Documents\2200740_Blackstone WTP_HVAC_V20_Boodler.rvt

Project:
TOWN OF BLACKSTONE, MASSACHUSETTS DEPARTMENT OF PUBLIC WORKS
WATER TREATMENT PLANT
53 ELM STREET, BLACKSTONE, MASSACHUSETS,01504

Weston & Sampson
Weston & Sampson Engineers, Inc.
55 Walkers Brook Drive, Suite 100
Reading, MA 01867
978.532.1900 800.SAMPSON
www.westonandsampson.com

Consultants:

Revisions:

No.	Date	Description

COA:

"COPYRIGHT ©2021 BY WESTON & SAMPSON
THIS DRAWING HAS BEEN PREPARED FOR THE EXCLUSIVE USE OF THE CLIENT & PROJECT NAME LISTED ON THIS DRAWING ONLY.
REPRODUCTION, RELEASE OF UTILIZATION OF THE DRAWING CONTENT BY OTHER CLIENTS / FIRMS AND ON OTHER PROJECTS IS PROHIBITED BY LAW.
WESTON & SAMPSON RETAINS THE EXCLUSIVE USE OF THE INTELLECTUAL PROPERTY CONTAINED HEREIN.

Seal:
COMMONWEALTH OF MASSACHUSETTS
SCOTT E. HENRIQUES
MECHANICAL
No. 40721
REGISTERED
PROFESSIONAL ENGINEER

Issued For:
BID DOCUMENTS

Scale:

Key Plan:

Date:	05/21/2021
Drawn By:	YK
Reviewed By:	SEH
Approved By:	SEH
W&S Project No.:	2200740
W&S File No.:	TBD

Drawing Title:
MECHANICAL AUTOMATIC TEMPERATURE CONTROLS

Sheet Number:
H702

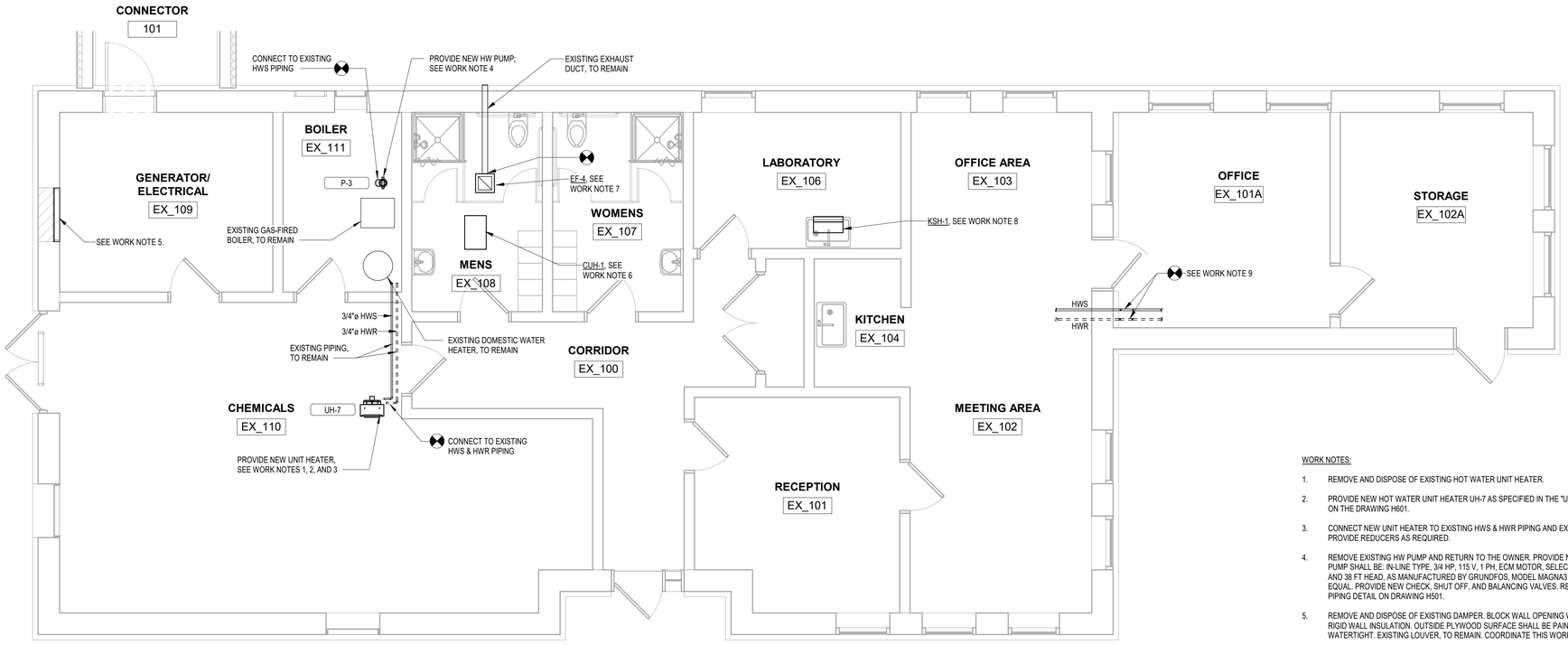

2 HD101B ALTERNATE No. 2 - EXISTING BUILDING FIRST FLOOR PLAN

1/4" = 1'-0"

0 2' 4' 8'

WORK NOTES:

1. REMOVE AND DISPOSE OF EXISTING HOT WATER UNIT HEATER.
2. PROVIDE NEW HOT WATER UNIT HEATER UH-7 AS SPECIFIED IN THE "UNIT HEATER SCHEDULE" ON THE DRAWING H601.
3. CONNECT NEW UNIT HEATER TO EXISTING HWS & HWR PIPING AND EXISTING CONTROLS. PROVIDE REDUCERS AS REQUIRED.
4. REMOVE EXISTING HW PUMP AND RETURN TO THE OWNER. PROVIDE NEW HOT WATER PUMP. PUMP SHALL BE: IN-LINE TYPE, 3/4 HP, 115 V, 1 PH, ECM MOTOR, SELECTED FOR 16 GPM FLOW AND 38 FT HEAD, AS MANUFACTURED BY GRUNDFOS, MODEL MAGNA3 40-120, OR APPROVED EQUAL. PROVIDE NEW CHECK, SHUT OFF, AND BALANCING VALVES. REFER TO IN-LINE PUMP PIPING DETAIL ON DRAWING H501.
5. REMOVE AND DISPOSE OF EXISTING DAMPER. BLOCK WALL OPENING WITH PLYWOOD AND 4" RIGID WALL INSULATION. OUTSIDE PLYWOOD SURFACE SHALL BE PAINTED IN BLACK. SEAL WATERTIGHT. EXISTING LOUVER, TO REMAIN. COORDINATE THIS WORK WITH ARCHITECTURAL.
6. REMOVE AND DISPOSE OF EXISTING CABINET UNIT HEATER. PROVIDE NEW CEILING MOUNTED UNIT HEATER. CONNECT CABINET UH TO EXISTING HWS & HWR PIPING AND CONTROLS. PIPING SIZE VIF, PROVIDE REDUCERS AS REQUIRED. UNIT SHALL BE 3.0 MBH, 120 V / 1 PH / 60 HZ, AS MANUFACTURED BY BEACON MORRIS, TWIN-FLO III, MODEL 42, WITH RECESSED PLATE W42, OR APPROVED EQUAL.
7. REMOVE AND DISPOSE OF EXISTING BATHROOM EXHAUST FAN. PROVIDE NEW CEILING MOUNTED FAN. CONNECT TO EXISTING DUCTWORK AND CONTROLS. FAN SHALL BE 80 CFM, 120 V / 1 PH / 60 HZ, AS MANUFACTURED BY PANASONIC, MODEL FV-0510, OR APPROVED EQUAL.
8. REMOVE AND DISPOSE OF EXISTING KICK-SPACE UNIT HEATER UNDER LABORATORY SINK. PROVIDE NEW KICK-SPACE HEATER. CONNECT TO EXISTING HWS & HWR PIPING. UNIT SHALL BE 10.0 MBH, 120 V / 1 PH / 60 HZ, AS MANUFACTURED BY BEACON MORRIS, TWIN-FLO III, MODEL 120, OR APPROVED EQUAL. CONTRACTOR SHALL VERIFY AVAILABLE SPACE UNDER THE SINK.
9. EXISTING BASEBOARD RADIATORS IN OFFICE EX_101A & STORAGE EX_102A WERE DISCONNECTED FROM THE EXISTING HWS & HWR PIPING SYSTEM. HW PIPES WERE CAPPED IN THE CEILING SPACE. CONTRACTOR SHALL RECONNECT EXISTING BASEBOARD RADIATORS TO EXISTING HW PIPING. PROVIDE ADDITIONAL PIPING PIECES WITH INSULATION AS REQUIRED FOR RECONNECTION. PIPE SIZE AND MATERIAL SHALL MATCH EXISTING (VIF).

Project:
TOWN OF BLACKSTONE, MASSACHUSETTS DEPARTMENT OF PUBLIC WORKS
WATER TREATMENT PLANT
53 ELM STREET, BLACKSTONE, MASSACHUSETS,01504

Weston & Sampson
Weston & Sampson Engineers, Inc.
55 Walkers Brook Drive, Suite 100
Reading, MA 01867
978.532.1900 800.SAMPSON
www.westonandsampson.com

Consultants:

Revisions:

No.	Date	Description

COA:
"COPYRIGHT ©2021 BY WESTON & SAMPSON
THIS DRAWING HAS BEEN PREPARED FOR THE EXCLUSIVE USE OF THE CLIENT & PROJECT NAME LISTED ON THIS DRAWING ONLY.
REPRODUCTION, RELEASE OF UTILIZATION OF THE DRAWING CONTENT BY OTHER CLIENTS / FIRMS AND ON OTHER PROJECTS IS PROHIBITED BY LAW.
WESTON & SAMPSON RETAINS THE EXCLUSIVE USE OF THE INTELLECTIAL PROPERTY CONTAINED HEREIN.

Seal:

COMMONWEALTH OF MASSACHUSETTS
SCOTT E. HENRIQUES
MECHANICAL
No. 40721
REGISTERED
PROFESSIONAL ENGINEER

Issued For:
BID DOCUMENTS

Scale:

Key Plan:

Date:	05/21/2021
Drawn By:	YK
Reviewed By:	SEH
Approved By:	SEH
W&S Project No.:	2200740
W&S File No.:	TBD

Drawing Title:
ALTERNATE No. 2 - EXISTING BUILDING FIRST FLOOR PLAN

Sheet Number:
HD101B

5/28/2021 10:30:31 AM C:\Users\boodlerl\OneDrive - WESTON & SAMPSON ENGINEERS, Inc\Documents\2200740_Blackstone WTP_HVAC_V20_BoodlerR.rvt

GENERAL NOTES:

1. REFER TO SPECIFICATION SECTIONS 01 12 16 – SCOPE AND SEQUENCE AND 02 41 19 – SELECTIVE STRUCTURE DEMOLITION FOR ADDITIONAL INFORMATION
2. SEE ELECTRICAL AND MECHANICAL PLANS FOR ADDITIONAL EQUIPMENT DEMOLITION

DEMOLITION NOTES:

1. REMOVE AND DISPOSE OF EXISTING SODIUM HYDROXIDE CHEMICAL BULK TANKS, DAY TANK, AND TRANSFER PUMP
2. REMOVE AND DISPOSE OF SODIUM HYDROXIDE AND SODIUM HEXAMETAPHOSPHATE CHEMICAL FEED PUMPS
3. REMOVE AND DISPOSE OF EXISTING CHLORINE CHEMICAL FEED SYSTEM INCLUDING DAY TANK, TRANSFER PUMP, AND CHEMICAL FEED PUMP
4. REMOVE AND DISPOSE OF EXISTING SODIUM HEXAMETAPHOSPHATE DAY TANK
5. REMOVE AND DISPOSE OF SODIUM HEXAMETAPHOSPHATE CHEMICAL FEED PIPING AND CHEMICAL INJECTION QUILL
6. REMOVE AND DISPOSE OF EXISTING SODIUM HYPOCHLORITE AND SODIUM HYDROXIDE CHEMICAL INJECTION QUILLS
7. REMOVE AND DISPOSE OF EXISTING ORIFICE PLATE FLOW METER AND FLOW INDICATING TRANSMITTER
8. REMOVE AND DISPOSE OF EXISTING (2) 8" GATE VALVES
9. REMOVE EXISTING CHEMICAL FEED CONTROL PANELS AND RELOCATE ELECTRICAL CONDUITS TO PROPOSED CCF CHEMICAL FEED CONTROL PANEL (SEE LOCATION THIS SHEET)

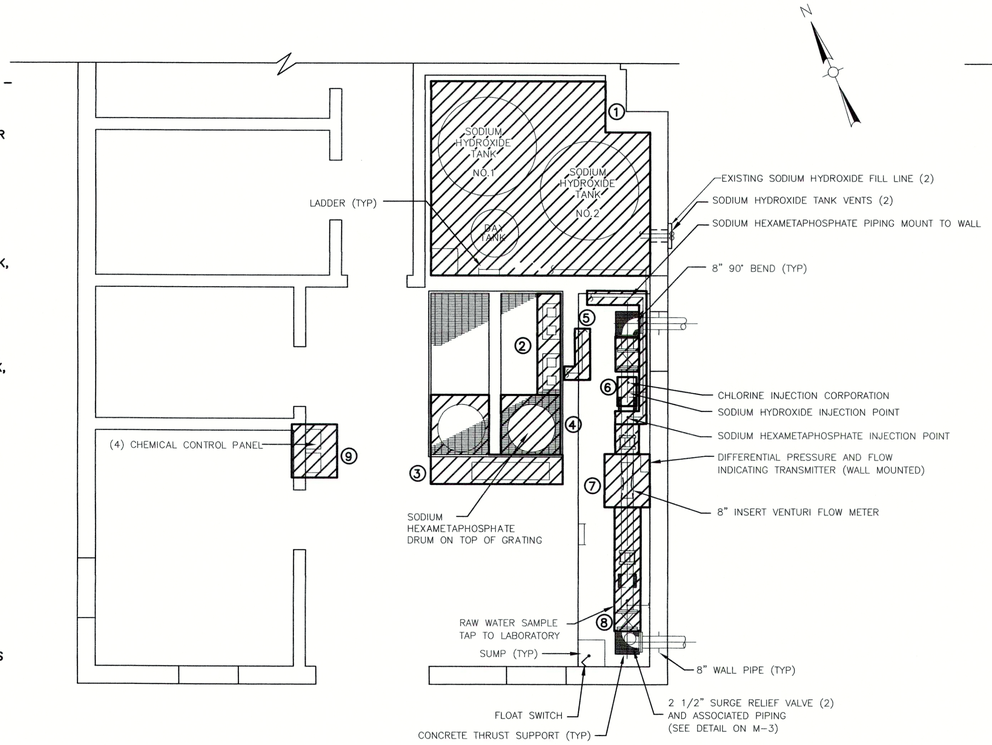

CORROSION CONTROL FACILITY DEMO PLAN
SCALE 1/4" = 1'-0"

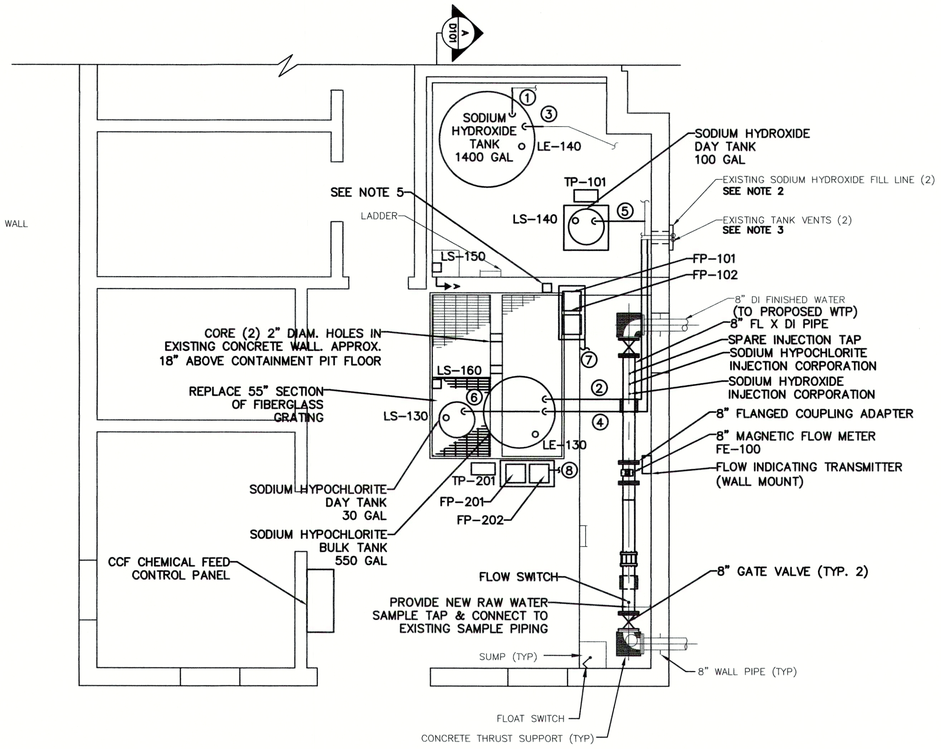

CORROSION CONTROL FACILITY CHEMICAL ROOM PLAN
SCALE 1/4" = 1'-0"

NOTES:

1. MOUNT ALL CHEMICAL FEED PUMPS ON UNISTRUT AND STAINLESS STEEL SHELF
2. EXISTING TANK FILL LINE PENETRATIONS TO REMAIN. CONNECT (1) EXISTING FILL LINE TO PROPOSED SODIUM HYDROXIDE BULK TANK. REROUTE (1) EXISTING FILL LINE TO PROPOSED SODIUM HYPOCHLORITE BULK TANK AS SHOWN
3. EXISTING TANK VENT PENETRATIONS TO REMAIN. CONNECT (1) EXISTING VENT TO PROPOSED SODIUM HYDROXIDE BULK TANK. REROUTE (1) EXISTING VENT TO PROPOSED SODIUM HYPOCHLORITE BULK TANK AS SHOWN
4. CONTRACTOR TO PROVIDE EXTERIOR FILL PIPE I.D. LABELS. SEE SHEET D602 FOR DETAIL
5. MOUNT TRANSFER PUMP SWITCH ON UNISTRUT ABOVE HYDROXIDE CONTAINMENT AREA

① 2" CPVC NaOH BULK TANK FILL LINE
② 2" CPVC NaOCl BULK TANK FILL LINE
③ 3" CPVC NaOH BULK TANK VENT
④ 3" CPVC NaOCl BULK TANK VENT
⑤ 2" CPVC NaOH DAY TANK VENT
⑥ 2" CPVC NaOCl DAY TANK VENT
⑦ 3/8" POLYETHYLENE NaOH CHEMICAL FEED TO INJECTION POINT (ENCASED IN 1 ½" PVC PIPE, PULL SPARE 3/8" TUBE)
⑧ 3/8" POLYETHYLENE NaOCl CHEMICAL FEED TO INJECTION POINT (ENCASED IN 1 ½" PVC PIPE, PULL SPARE 3/8" TUBE)

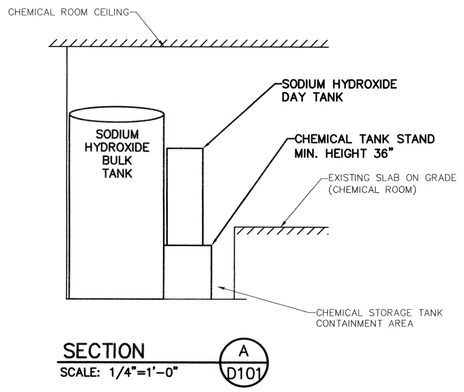

SECTION A/D101
SCALE: 1/4"=1'-0"

0 4 8 12
SCALE: 1/4"=1'-0"

Project:

TOWN OF BLACKSTONE, MASSACHUSETTS
DEPARTMENT OF PUBLIC WORKS

WATER TREATMENT PLANT

53 ELM STREET, BLACKSTONE, MASSACHUSETTS, 01504

Weston & Sampson

Weston & Sampson Engineers, Inc.
55 Walkers Brook Drive
Reading, MA, 01867
978.532.1900 800.SAMPSON
www.westonandsampson.com

Consultants:

Revisions:

No.	Date	Description

Seal:

COMMONWEALTH OF MASSACHUSETTS
JEFFREY W. McCLURE
CIVIL
No. 41588
REGISTERED PROFESSIONAL ENGINEER

COA:

©COPYRIGHT ©2021 BY WESTON & SAMPSON
THIS DRAWING HAS BEEN PREPARED FOR THE EXCLUSIVE USE OF THE CLIENT & PROJECT NAME LISTED ON THIS DRAWING ONLY.

REPRODUCTION, RELEASE OF UTILIZATION OF THE DRAWING CONTENT BY OTHER CLIENTS / FIRMS AND ON OTHER PROJECTS IS PROHIBITED BY LAW.

WESTON & SAMPSON RETAINS THE EXCLUSIVE USE OF THE INTELLECTUAL PROPERTY CONTAINED HEREIN.

Issued For:

BID DOCUMENTS

Scale:	AS NOTED
Date:	5/21/2021
Drawn By:	MEW
Reviewed By:	SHK
Approved By:	JWM
W&S Project No.:	2200740
W&S File No.:	-

Drawing Title:

CORROSION CONTROL FACIILTY PLAN

Sheet Number:

D101

Rev: 1.6 Date: 04/10/2019

COPYRIGHT 2019 WESTON & SAMPSON

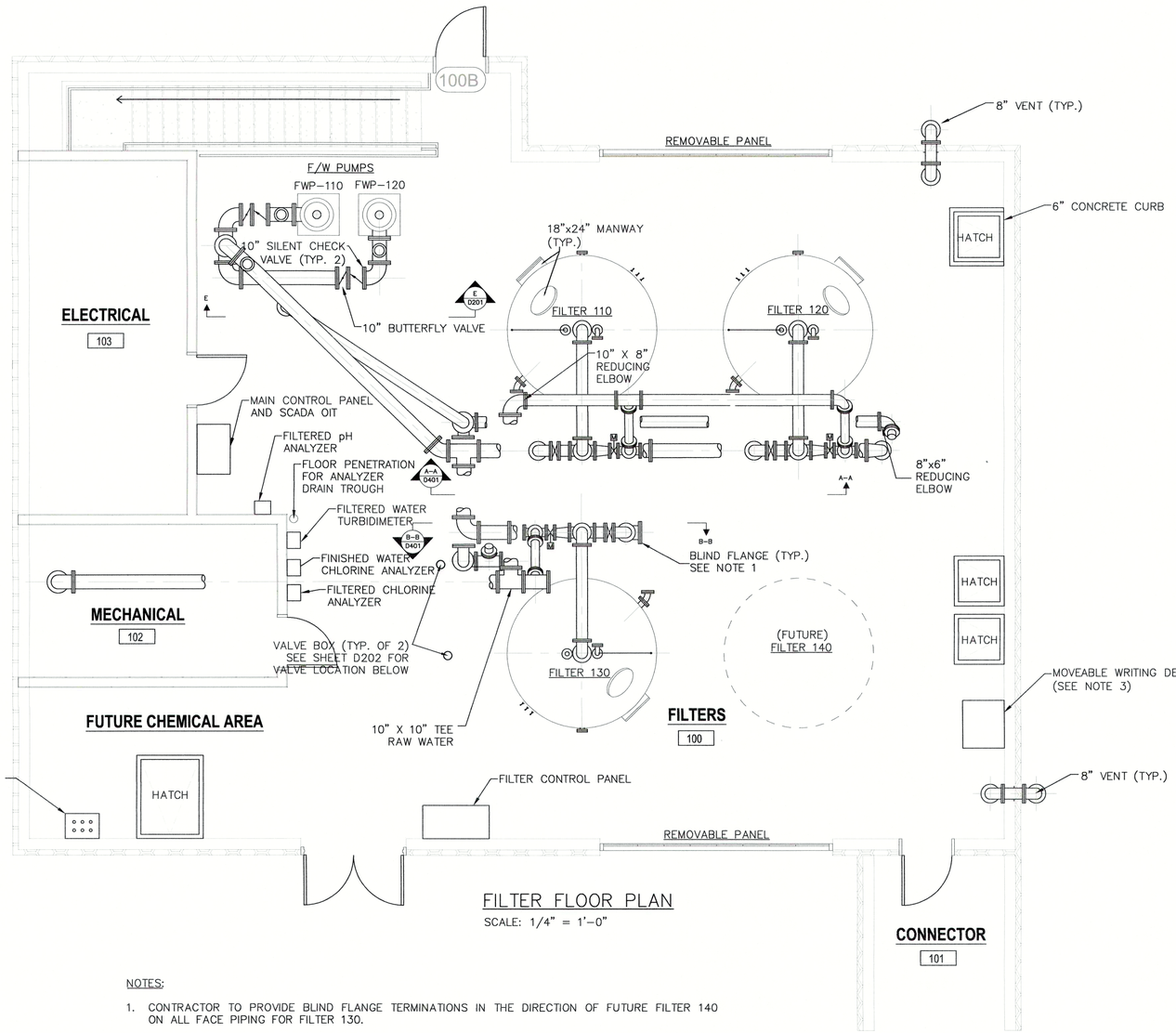

FILTER FLOOR PLAN

SCALE: 1/4" = 1'-0"

NOTES:

1. CONTRACTOR TO PROVIDE BLIND FLANGE TERMINATIONS IN THE DIRECTION OF FUTURE FILTER 140 ON ALL FACE PIPING FOR FILTER 130.
2. ALL FILTER AND PUMP PIPING SHALL BE DUCTILE IRON. FUTURE AIR PIPING SHALL BE STAINLESS STEEL.
3. MOVEABLE WRITING DESK SHALL BE GLOBAL INDUSTRIES SHOP DESK – PIGEONHOLE RISER WITH SLOPED WRITING SURFACE AND WHEEL CASTER PACK, OR APPROVED EQUAL.

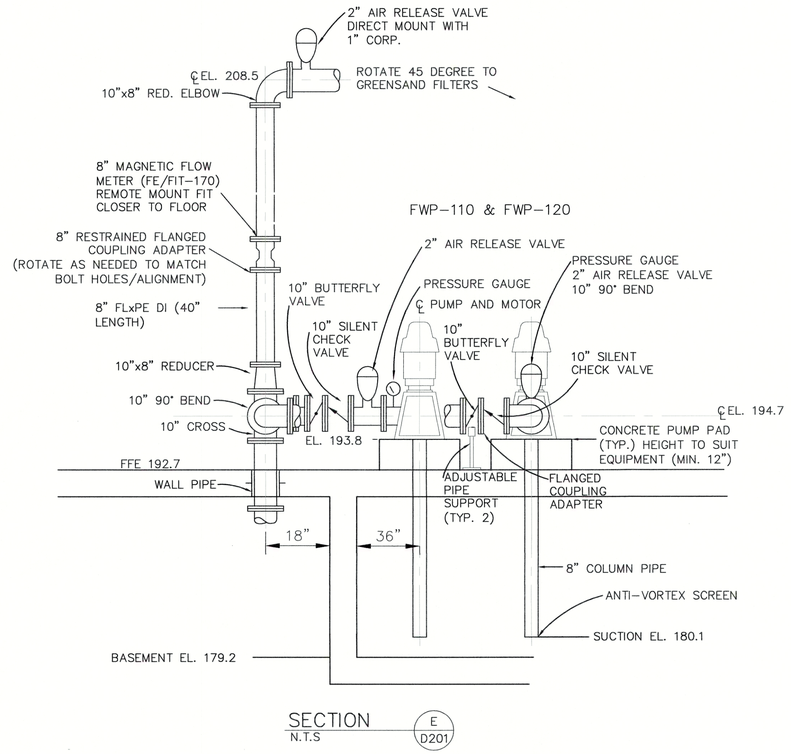

SECTION E / D201

N.T.S

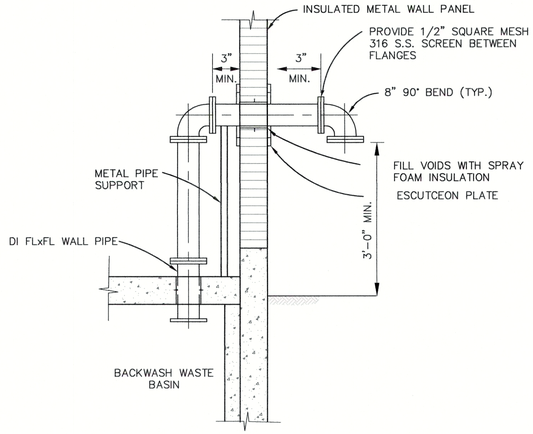

BACKWASH SUPPLY AND WASTE BASIN VENT DETAIL

N.T.S.

NOTES:

1. THE METAL BUILDING INSTALLER IS RESPONSIBLE FOR CUTTING, FRAMING, FLASHING, AND SEALING ALL ROOF AND WALL PENETRATIONS. REVIEW PLUMBING, ELECTRICAL, EQUIPMENT AND MECHANICAL DRAWINGS FOR CONSTRUCTION NOT LISTED ON THIS DRAWING INCLUDING, BUT NOT LIMITED TO, VENT STACKS, FLUES, AND EXHAUST FANS, OUTLET BOXES, LIGHT FIXTURES AND WALL HYDRANTS.

0 4 8 12

SCALE: 1/4"=1'-0"

Project:

TOWN OF BLACKSTONE, MASSACHUSETTS
DEPARTMENT OF PUBLIC WORKS

WATER TREATMENT PLANT

53 ELM STREET, BLACKSTONE, MASSACHUSETTS, 01504

Weston & Sampson

Weston & Sampson Engineers, Inc.
55 Walkers Brook Drive
Reading, MA, 01867
978.532.1900 800.SAMPSON
www.westonandsampson.com

Consultants:

Revisions:

No.	Date	Description

Seal:

JEFFREY W. McCLURE CIVIL No. 41836 REGISTERED PROFESSIONAL ENGINEER
COMMONWEALTH OF MASSACHUSETTS

COA:

©COPYRIGHT ©2021 BY WESTON & SAMPSON
THIS DRAWING HAS BEEN PREPARED FOR THE EXCLUSIVE USE OF THE CLIENT & PROJECT NAME LISTED ON THIS DRAWING ONLY.

REPRODUCTION, RELEASE OF UTILIZATION OF THE DRAWING CONTENT BY OTHER CLIENTS / FIRMS AND ON OTHER PROJECTS IS PROHIBITED BY LAW.

WESTON & SAMPSON RETAINS THE EXCLUSIVE USE OF THE INTELLECTUAL PROPERTY CONTAINED HEREIN.

Issued For:

BID DOCUMENTS

Scale:	AS NOTED
Date:	5/21/2021
Drawn By:	MEW
Reviewed By:	SHK
Approved By:	JWM
W&S Project No.:	2200740
W&S File No.:	-

Drawing Title:

FILTER PLAN

Sheet Number:

D201

Rev: 1.6 Date: 04/10/2019

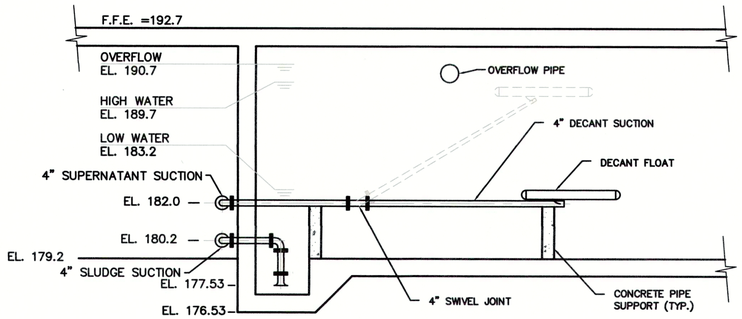

DECANT FLOAT DETAIL
SCALE: 1/4"=1'-0"

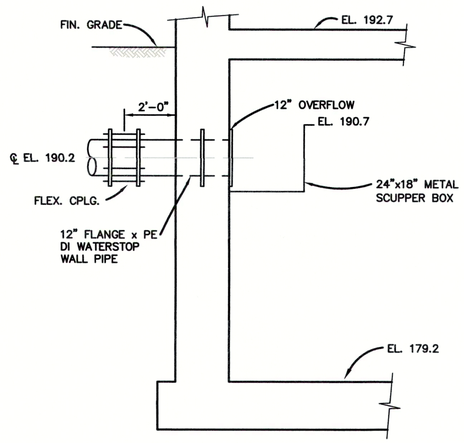

SECTION G/D202
SCALE: N.T.S

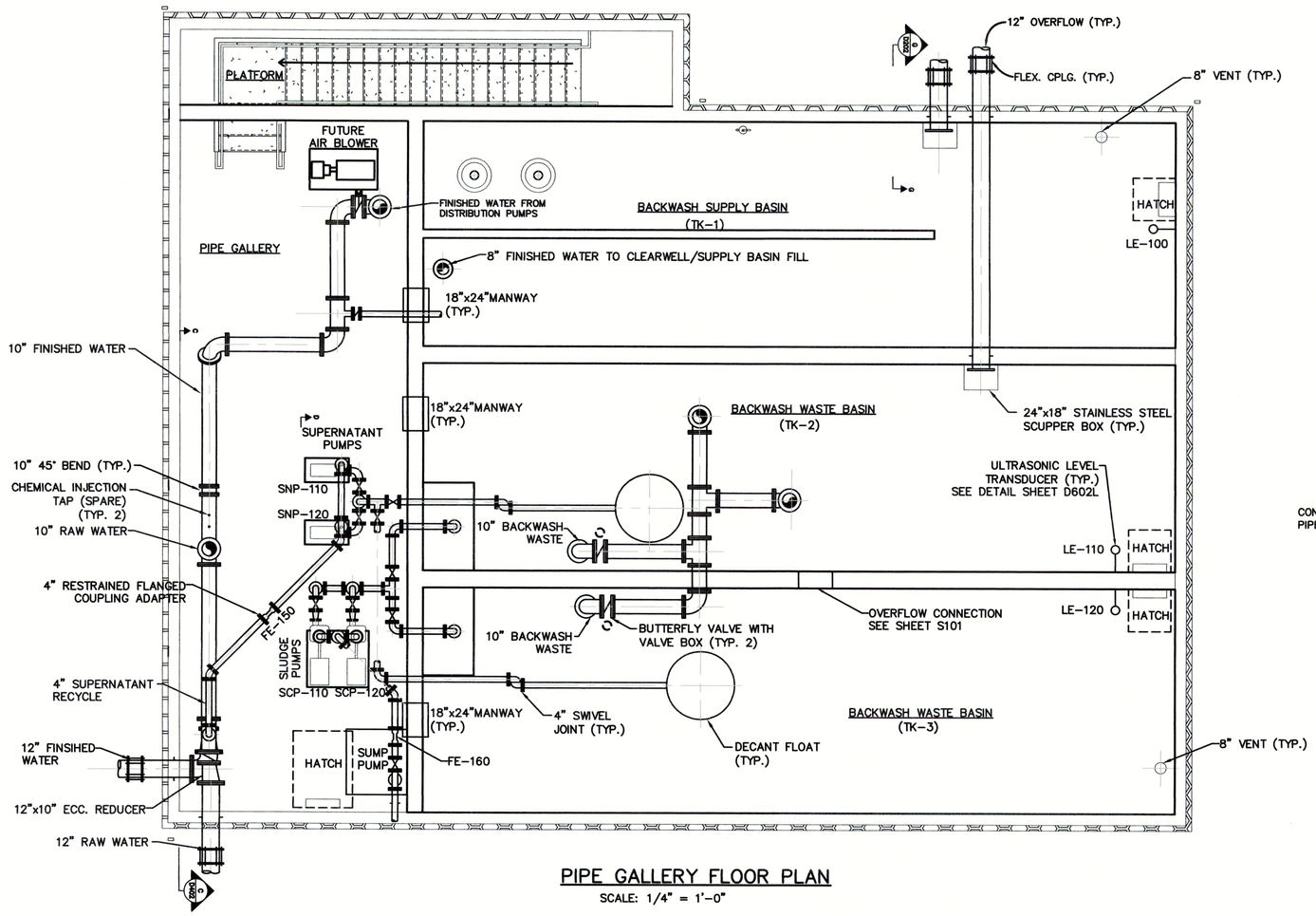

PIPE GALLERY FLOOR PLAN
SCALE: 1/4" = 1'-0"

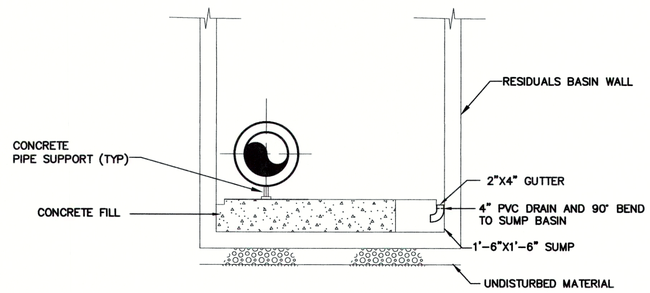

SUMP AREA GUTTER DETAIL
N.T.S.

0 4 8 12
SCALE: 1/4"=1'-0"

Project:

TOWN OF BLACKSTONE,
MASSACHUSETTS
DEPARTMENT OF PUBLIC
WORKS

WATER TREATMENT PLANT

53 ELM STREET, BLACKSTONE,
MASSACHUSETTS, 01504

Weston & Sampson

Weston & Sampson Engineers, Inc.
55 Walkers Brook Drive
Reading, MA, 01867
978.532.1900 800.SAMPSON
www.westonandsampson.com

Consultants:

Revisions:

No.	Date	Description

Seal:

COMMONWEALTH OF MASSACHUSETTS
JEFFREY W. McCLURE
CIVIL
No. 41836
REGISTERED PROFESSIONAL ENGINEER

COA:

"COPYRIGHT ©2021 BY WESTON & SAMPSON
THIS DRAWING HAS BEEN PREPARED FOR THE EXCLUSIVE USE OF THE CLIENT & PROJECT NAME LISTED ON THIS DRAWING ONLY.

REPRODUCTION, RELEASE OF UTILIZATION OF THE DRAWING CONTENT BY OTHER CLIENTS / FIRMS AND ON OTHER PROJECTS IS PROHIBITED BY LAW.

WESTON & SAMPSON RETAINS THE EXCLUSIVE USE OF THE INTELLECTUAL PROPERTY CONTAINED HEREIN.

Issued For:

BID DOCUMENTS

Scale:	AS NOTED
Date:	5/21/2021
Drawn By:	MEW
Reviewed By:	SHK
Approved By:	JWM
W&S Project No.:	2200740
W&S File No.:	-

Drawing Title:

PIPE GALLERY
PLAN

Sheet Number:

D202

Rev: 1.6 Date: 04/10/2019

COPYRIGHT 2019 WESTON & SAMPSON

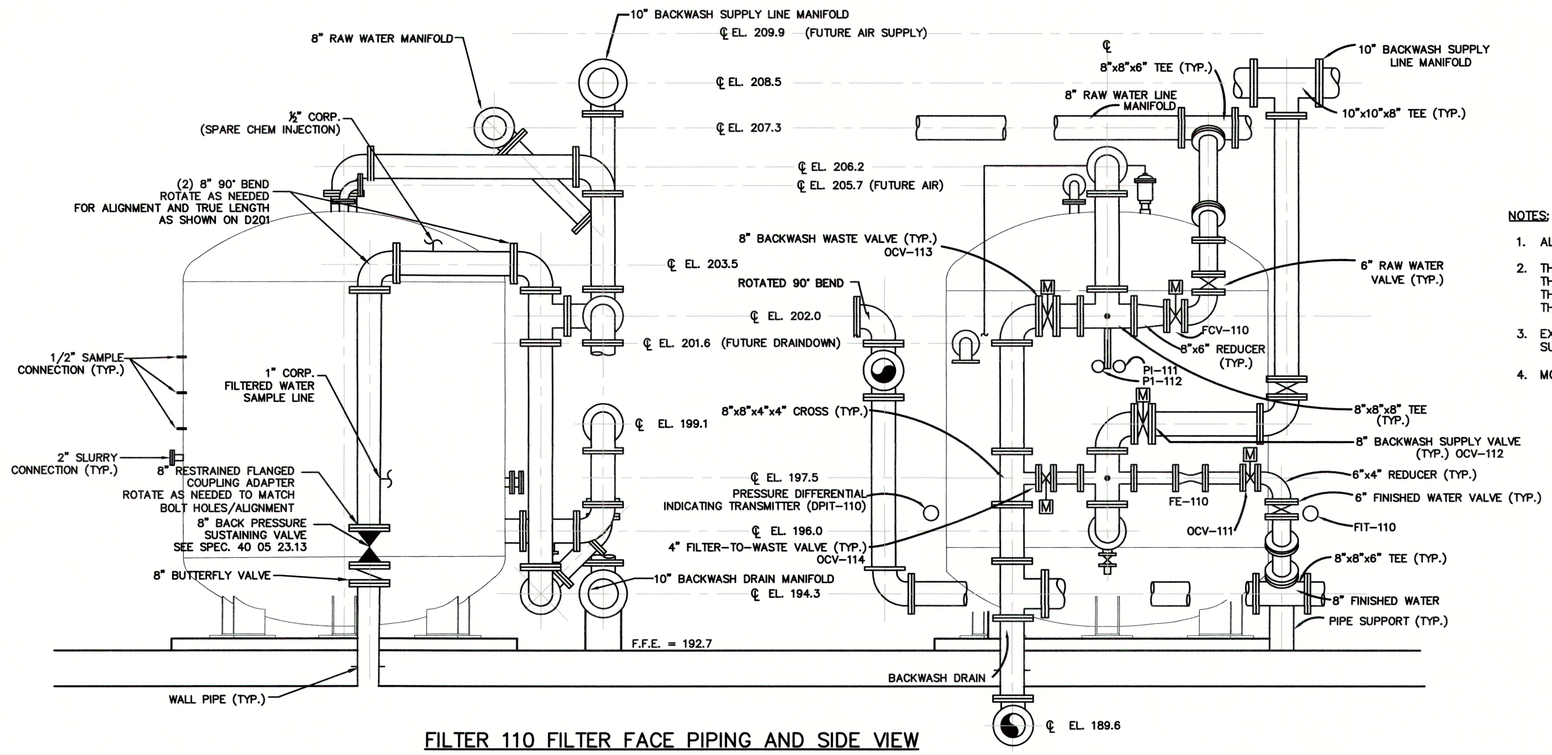

FILTER 110 FILTER FACE PIPING AND SIDE VIEW

SCALE: 1/2"=1'-0"

NOTES:

1. ALL FILTER AND PUMP PIPING SHALL BE DUCTILE IRON. FUTURE AIR PIPING SHALL BE STAINLESS STEEL..
2. THE PROPOSED CENTERLINE ELEVATIONS SHOWN ON THE CONTRACT DRAWINGS ARE APPROXIMATE. THE CONTRACTOR SHALL WORK WITH THE GREENSAND PLUS FILTER SYSTEM SUPPLIER TO ESTABLISH THE EXACT LOCATION OF ALL PIPING, VALVES, AND FITTINGS BASED ON THE ACTUAL LOCATION OF THE CONNECTIONS TO THE VESSEL.
3. EXTEND COPPER PIPING FROM AIR RELEASE VALVE TO FLOOR LEVEL OUTSIDE LIMITS OF CONCRETE SUPPORT PAD.
4. MOUNT APPROXIMATELY 5'-0" ABOVE FINISHED FLOOR.

0 2 4 6
SCALE: 1/2"=1'-0"

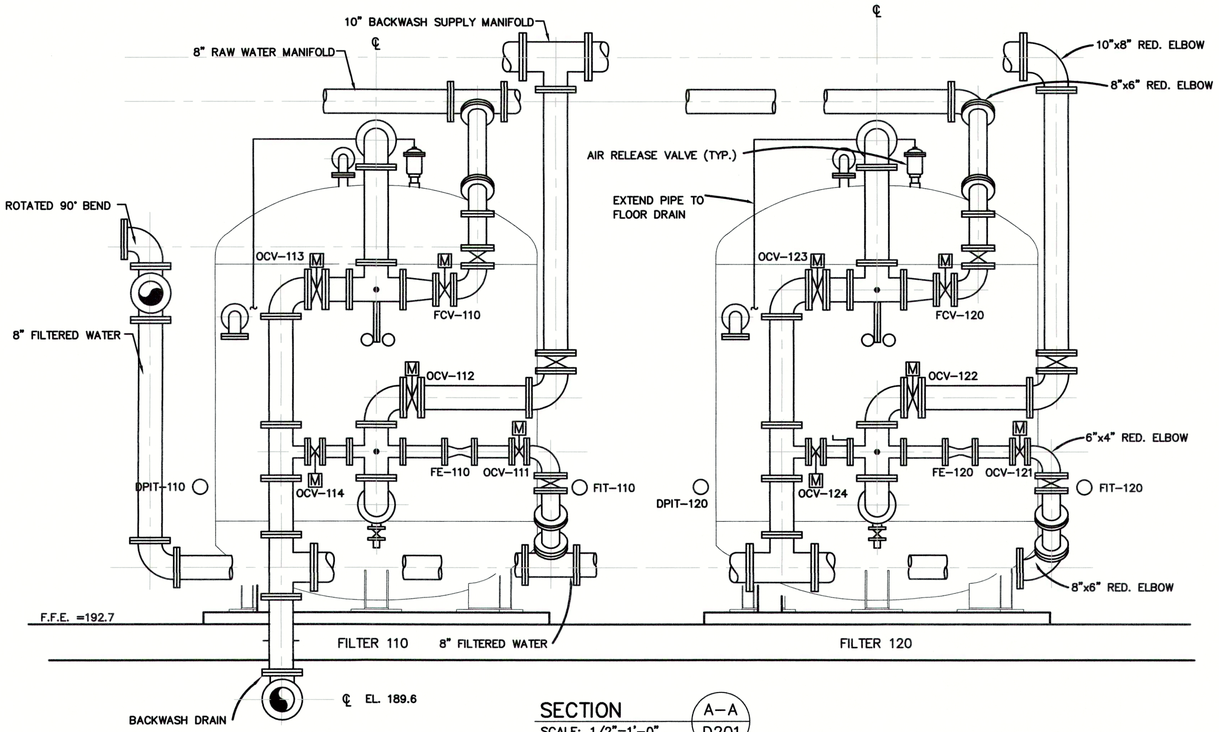

SECTION A-A D201

SCALE: 1/2"=1'-0"

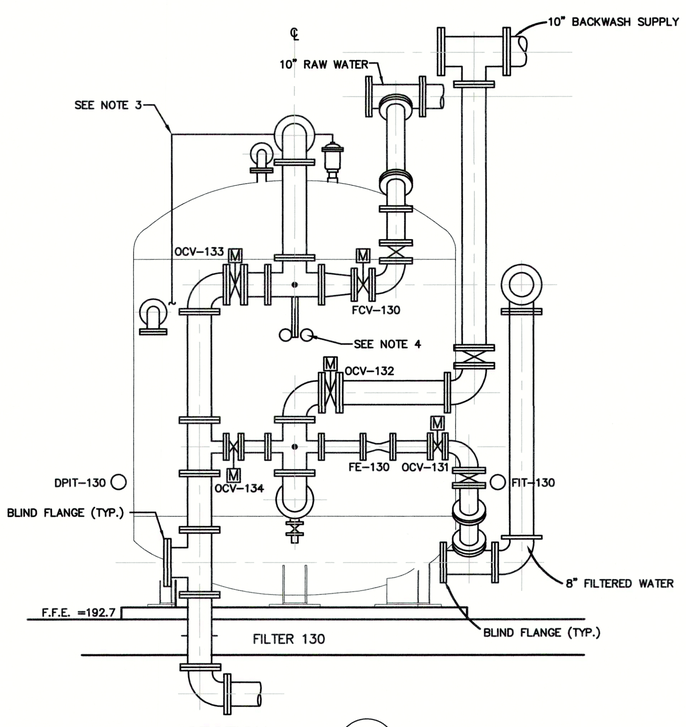

SECTION B-B D201

SCALE: 1/2"=1'-0"

Project:

TOWN OF BLACKSTONE, MASSACHUSETTS
DEPARTMENT OF PUBLIC WORKS

WATER TREATMENT PLANT

53 ELM STREET, BLACKSTONE, MASSACHUSETTS, 01504

Weston & Sampson

Weston & Sampson Engineers, Inc.
55 Walkers Brook Drive
Reading, MA, 01867
978.532.1900 800.SAMPSON
www.westonandsampson.com

Consultants:

Revisions:

No.	Date	Description

Seal:

COMMONWEALTH OF MASSACHUSETTS
JEFFREY W. McCLURE
CIVIL
No. 41835
REGISTERED PROFESSIONAL ENGINEER

COA:

"COPYRIGHT ©2021 BY WESTON & SAMPSON
THIS DRAWING HAS BEEN PREPARED FOR THE EXCLUSIVE USE OF THE CLIENT & PROJECT NAME LISTED ON THIS DRAWING ONLY.

REPRODUCTION, RELEASE OF UTILIZATION OF THE DRAWING CONTENT BY OTHER CLIENTS / FIRMS AND ON OTHER PROJECTS IS PROHIBITED BY LAW.

WESTON & SAMPSON RETAINS THE EXCLUSIVE USE OF THE INTELLECTUAL PROPERTY CONTAINED HEREIN.

Issued For:

BID DOCUMENTS

Scale:	AS NOTED
Date:	5/21/2021
Drawn By:	MEW
Reviewed By:	SHK
Approved By:	JWM
W&S Project No.:	2200740
W&S File No.:	-

Drawing Title:

FILTER FACE PIPING SECTION

Sheet Number:

D401

\\ws02.local\WSEP\Projects\MA\Blackstone MA\2200740 WTP Design\CAD\Blackstone - PR1, PR2, PR3, PR4.dwg

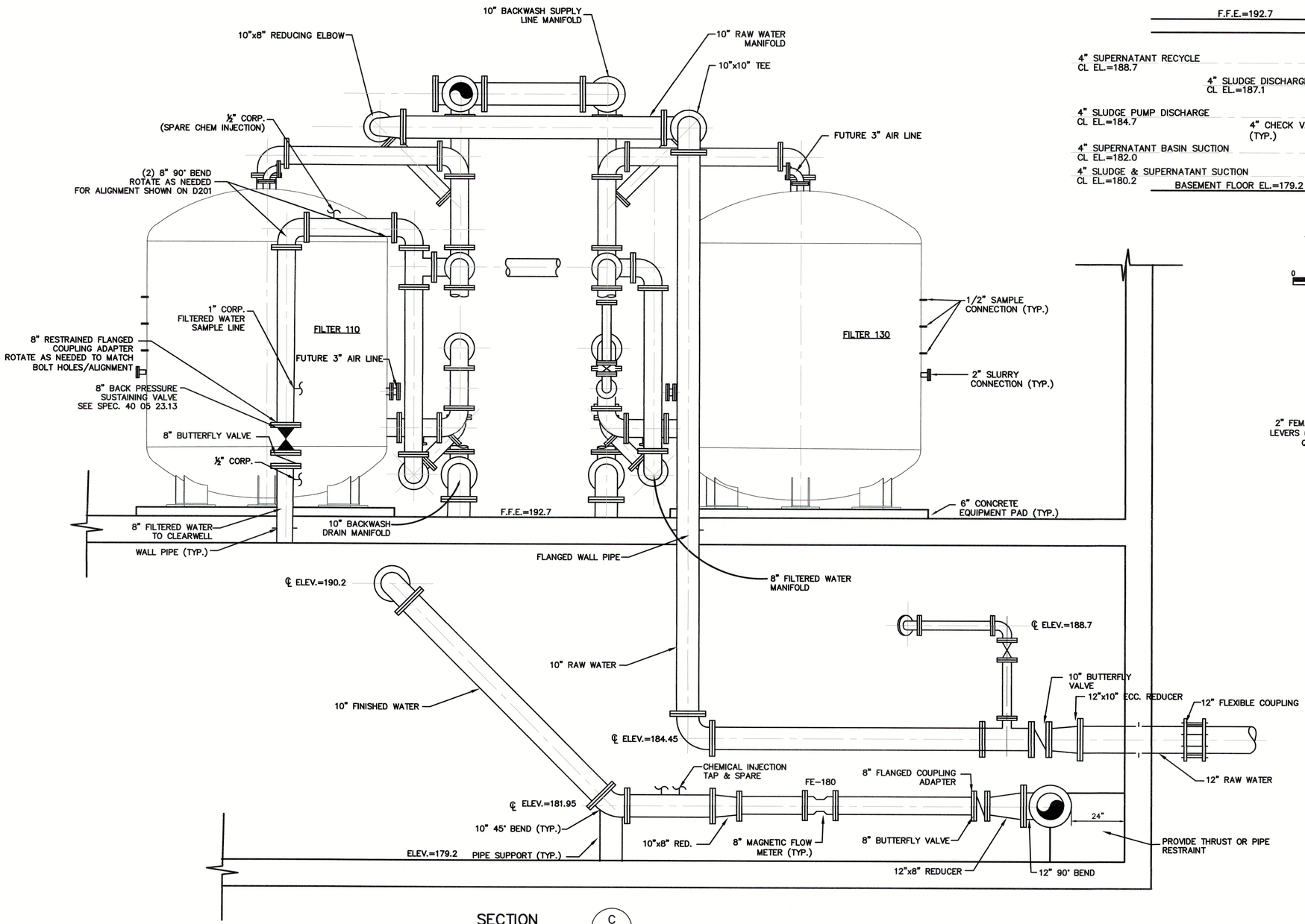

SECTION C / D201

SCALE: 1/2"=1'-0"

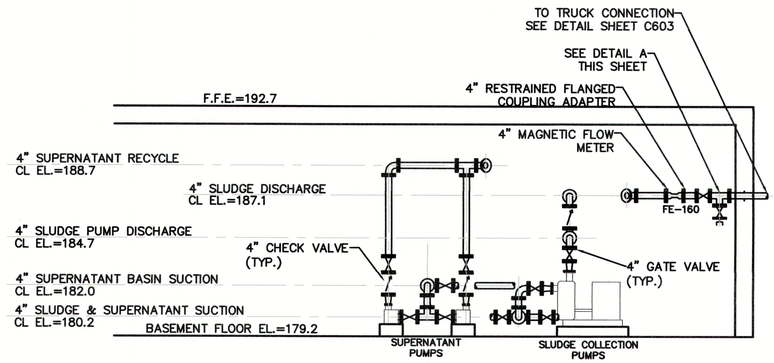

SECTION D / D202

SCALE: 1/4"=1'-0"

0 4 8 12

SCALE: 1/4"=1'-0"

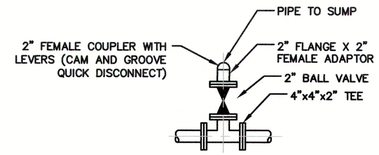

DETAIL A

SCALE: 1/2"=1'-0"
(SEE SECTION D, D202)

NOTES:

1. ALL FILTER AND PUMP PIPING SHALL BE DUCTILE IRON. FUTURE AIR PIPING SHALL BE STAINLESS STEEL.

0 2 4 6

SCALE: 1/2"=1'-0"

Project:

TOWN OF BLACKSTONE, MASSACHUSETTS
DEPARTMENT OF PUBLIC WORKS

WATER TREATMENT PLANT

53 ELM STREET, BLACKSTONE, MASSACHUSETTS, 01504

Weston & Sampson

Weston & Sampson Engineers, Inc.
55 Walkers Brook Drive
Reading, MA, 01867
978.532.1900 800.SAMPSON
www.westonandsampson.com

Consultants:

Revisions:

No.	Date	Description

Seal:

JEFFREY W. McCLURE CIVIL No. 41836 REGISTERED PROFESSIONAL ENGINEER
COMMONWEALTH OF MASSACHUSETTS

COA:

"COPYRIGHT ©2021 BY WESTON & SAMPSON
THIS DRAWING HAS BEEN PREPARED FOR THE EXCLUSIVE USE OF THE CLIENT & PROJECT NAME LISTED ON THIS DRAWING ONLY.

REPRODUCTION, RELEASE OF UTILIZATION OF THE DRAWING CONTENT BY OTHER CLIENTS / FIRMS AND ON OTHER PROJECTS IS PROHIBITED BY LAW.

WESTON & SAMPSON RETAINS THE EXCLUSIVE USE OF THE INTELLECTUAL PROPERTY CONTAINED HEREIN.

Issued For:

BID DOCUMENTS

Scale:	AS NOTED
Date:	5/21/2021
Drawn By:	MEW
Reviewed By:	SHK
Approved By:	JWM
W&S Project No.:	2200740
W&S File No.:	-

Drawing Title:

BACKWASH AND RECYCLE WATER SECTION

Sheet Number:

D402

Rev: 1.6 Date: 04/10/2019

COPYRIGHT 2019 WESTON & SAMPSON

\\wst01\cad\EEP\Projects\MA\Blackstone MA\2200740 WTP Design\CAD\Blackstone - PR1, PR2, PR3, PR4.dwg

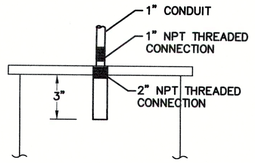

DAY TANK LEVEL TRANSDUCER
N.T.S.

NOTE:

1. MOUNT ULTRASONIC TRANSDUCER PER MANUFACTURER'S RECOMMENDATION SUCH THAT TRANSDUCER MAY BE EASILY REMOVED WITHOUT DISASSEMBLING TANK COVER OR RIGID CONDUIT.

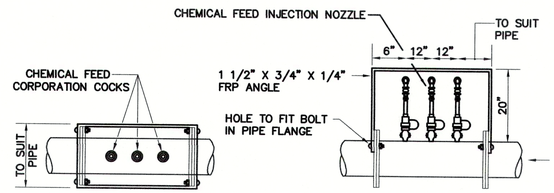

PLAN ELEVATION

NOTE:

1. TWO CHEMICAL FEED INJECTION NOZZLE GUARDS REQUIRED. SEE PLANS FOR LOCATIONS AND NUMBER OF CHEMICAL FEED INJECTION NOZZLES.
2. NUMBER OF CHEMICAL INJECTION NOZZLES AS REQUIRED CORPORATION GUARD DIMENSIONS TO SUIT NUMBER OF CHEMICAL INJECTION NOZZLES.
3. INSTALL 1/4" THICK PLEXIGLASS ON FOUR SIDES AND TOP. PLEXIGLASS SHOULD BE MOUNTED ON FRP ANGLE WITH STAINLESS STEEL SCREWS.

CHEMICAL FEED CORPORATION GUARD
NTS

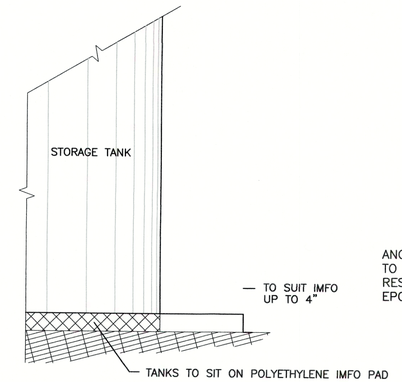

BULK CHEMICAL TANK BEARING DETAIL
N.T.S.

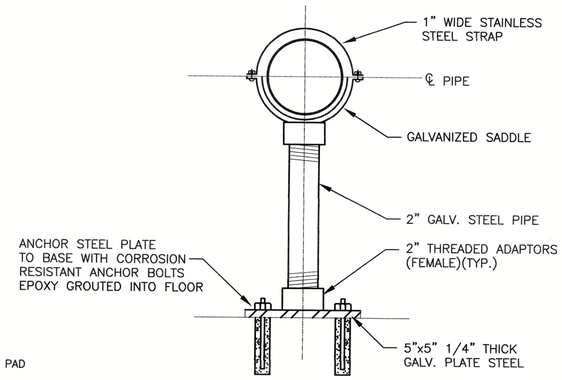

ADJUSTABLE STEEL PIPE SUPPORT
N.T.S.

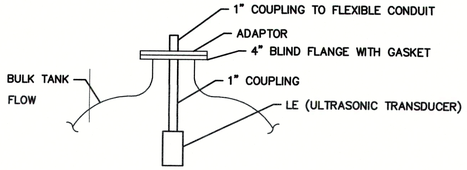

BULK TANK LEVEL TRANSDUCER
N.T.S.

NOTE:

1. CONTRACTOR SHALL SUPPLY ALL MOUNTING HARDWARE SHOWN AND AS RECOMMENDED BY TRANSDUCER MANUFACTURER.

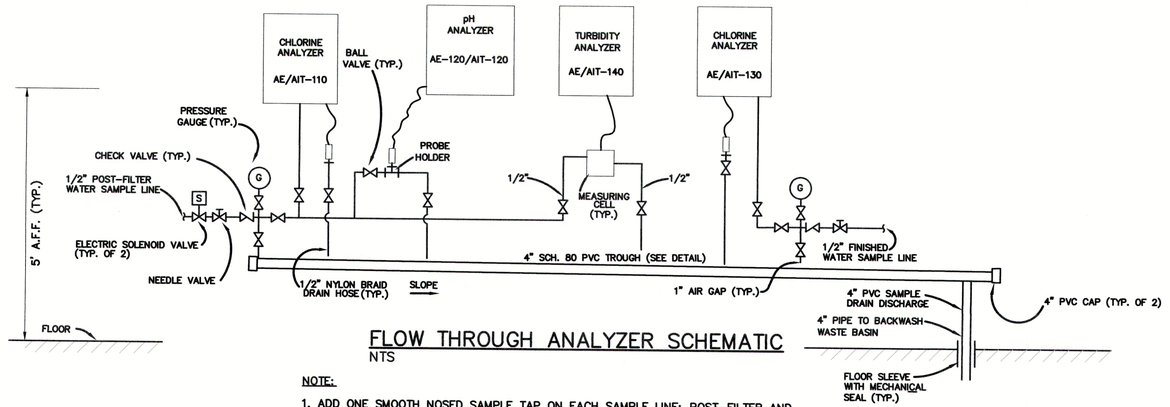

FLOW THROUGH ANALYZER SCHEMATIC
NTS

NOTE:

1. ADD ONE SMOOTH NOSED SAMPLE TAP ON EACH SAMPLE LINE; POST-FILTER AND FINISHED WATER SAMPLE LINES. LOCATION TO BE DETERMINED IN THE FIELD UPON APPROVAL BY THE OWNER.

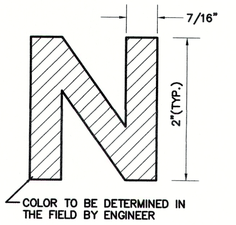

DETAIL
CHEMICAL TANK I.D. LETTERING
NOT TO SCALE

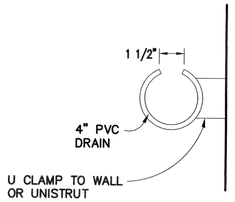

DRAIN TROUGH DETAIL
NOT TO SCALE

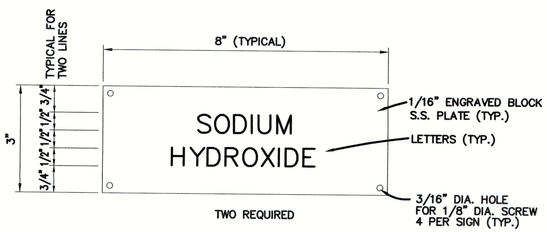

FILL PIPE EXTERIOR I.D. LABELS
NOT TO SCALE

LEGEND	QUANTITY
SODIUM HYDROXIDE	1
SODIUM HYPOCHLORITE	1

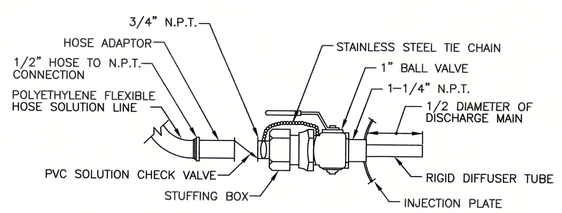

NOTES:
1. LABEL CHEMICAL INJECTION PIPE WITHIN 3 FEET OF INJECTION POINT WITH COLOR PLASTIC TAG.

PIPE LINE DIFFUSER BALL VALVE TYPE
N.T.S.

NOTES:

1. PROVIDE UNIONS AND/OR FLEXIBLE CONNECTIONS AS REQUIRED AT PUMPS, TANK CONNECTIONS, AND VALVES.
2. REFER TO SPECIFICATIONS FOR SIZE AND DIMENSIONS OF TANKS, CHEMICAL FEED EQUIPMENT AND APPURTENANCES.
3. CHEMICAL FEED PUMPS SHALL BE INSTALLED SUCH THAT VALVE ASSEMBLIES AND LIQUID ENDS ARE ACCESSIBLE AND REMOVABLE.
4. PROVIDE FIBERGLASS UNI-STRUT SUPPORTS ON WALL AND CEILING TO SUPPORT CHEMICAL FEED PIPING.
5. ALL CHEMICAL FEED LINES SHALL BE 2" UNLESS OTHERWISE NOTED.
6. DAY TANK VENTS SHALL RUN VERTICAL FROM THE DAY TANK, TO JUST BELOW THE CEILING, AND THEN HORIZONTALLY THROUGH THE BUILDING TO CONNECT TO EXISTING VENT PIPING AS SHOWN ON SHEET D101.
7. STRAINERS SHALL BE INSTALLED A MINIMUM 4" ABOVE THE FINISHED FLOOR.
8. ALL PIPE, VALVES, AND FITTINGS IN CONTACT WITH CHEMICALS FROM FILL PIPE TO THE START OF THE 3/8 OR 1/2 INCH POLYETHYLENE TUBING SHALL BE CPVC. CONTAINMENT PIPES FOR 3/8 OR 1/2 INCH POLYETHYLENE TUBING (NOT IN NORMAL CONTACT WITH CHEMICALS) SHALL BE PVC. LONG SWEEP PVC CONDUIT ELBOWS SHALL BE USED FOR CHANGES IN DIRECTION OF CONTAINMENT PIPES.
9. POSITION HIGH POINT VENT OVER METERING PUMP STAND. SLOPE INJECTION TUBING AND CARRIER PIPE DOWNWARD TOWARDS INJECTION POINT.

Project:

TOWN OF BLACKSTONE, MASSACHUSETTS
DEPARTMENT OF PUBLIC WORKS

WATER TREATMENT PLANT

53 ELM STREET, BLACKSTONE, MASSACHUSETTS, 01504

Weston & Sampson

Weston & Sampson Engineers, Inc.
55 Walkers Brook Drive
Reading, MA, 01867
978.532.1900 800.SAMPSON
www.westonandsampson.com

Consultants:

Revisions:

No.	Date	Description

Seal:

COMMONWEALTH OF MASSACHUSETTS
JEFFREY W. McCLURE
CIVIL
No. 41836
REGISTERED PROFESSIONAL ENGINEER

COA:

"COPYRIGHT ©2021 BY WESTON & SAMPSON
THIS DRAWING HAS BEEN PREPARED FOR THE EXCLUSIVE USE OF THE CLIENT & PROJECT NAME LISTED ON THIS DRAWING ONLY.

REPRODUCTION, RELEASE OF UTILIZATION OF THE DRAWING CONTENT BY OTHER CLIENTS / FIRMS AND ON OTHER PROJECTS IS PROHIBITED BY LAW.

WESTON & SAMPSON RETAINS THE EXCLUSIVE USE OF THE INTELLECTUAL PROPERTY CONTAINED HEREIN.

Issued For:

BID DOCUMENTS

Scale:	AS NOTED
Date:	5/21/2021
Drawn By:	MEW
Reviewed By:	SHK
Approved By:	JWM
W&S Project No.:	2200740
W&S File No.:	-

Drawing Title:

CHEMICAL FEED DETAILS

Sheet Number:

D601

Rev: 1.5 Date: 04/19/2019

COPYRIGHT 2019 WESTON & SAMPSON

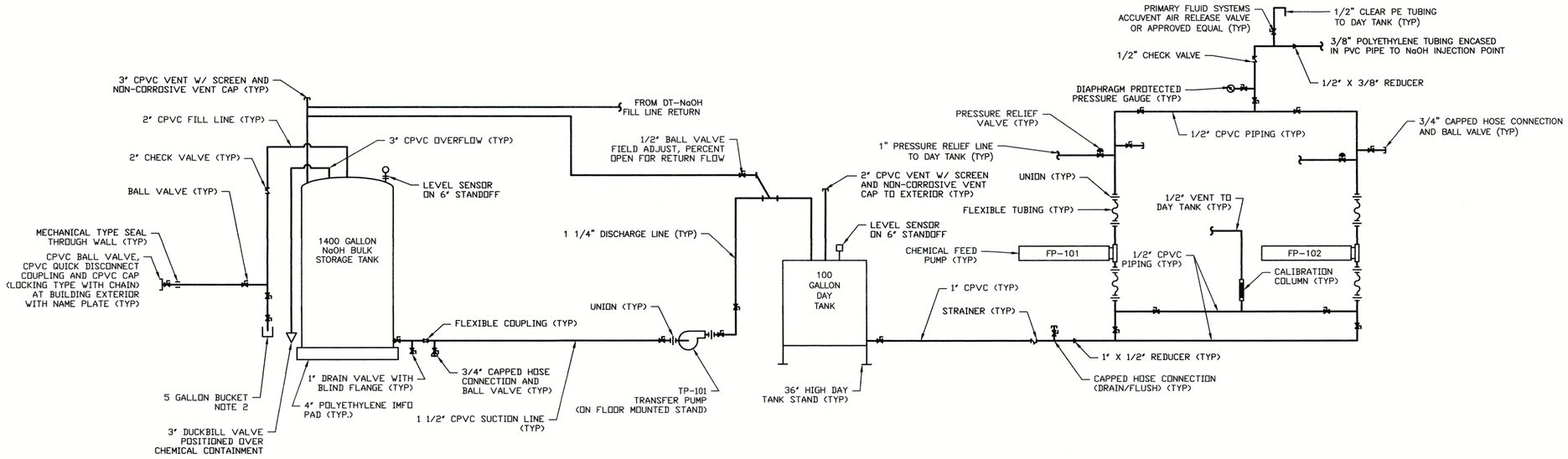

SODIUM HYDROXIDE BULK STORAGE SYSTEM

N.T.S.

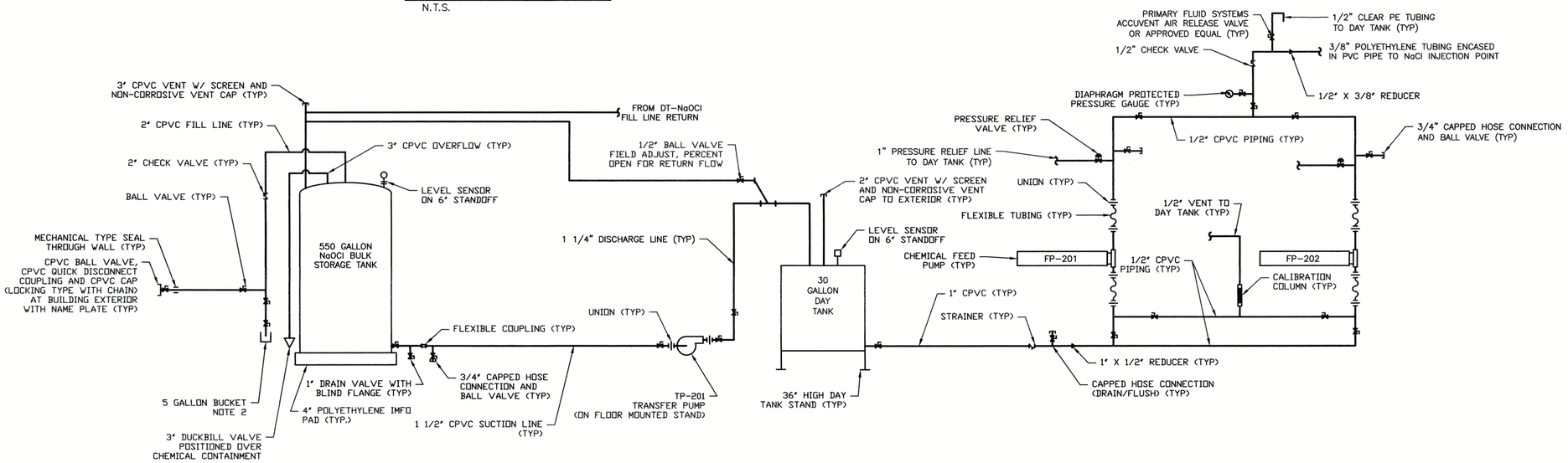

SODIUM HYPOCHLORITE BULK STORAGE SYSTEM

N.T.S.

Project:

TOWN OF BLACKSTONE, MASSACHUSETTS
DEPARTMENT OF PUBLIC WORKS

WATER TREATMENT PLANT

53 ELM STREET, BLACKSTONE, MASSACHUSETTS, 01504

Weston & Sampson

Weston & Sampson Engineers, Inc.
55 Walkers Brook Drive
Reading, MA, 01867
978.532.1900 800.SAMPSON
www.westonandsampson.com

Consultants:

Revisions:

No.	Date	Description

Seal:

COMMONWEALTH OF MASSACHUSETTS
JEFFREY W. McCLURE
CIVIL
No. 41838
REGISTERED PROFESSIONAL ENGINEER

COA:

"COPYRIGHT ©2021 BY WESTON & SAMPSON
THIS DRAWING HAS BEEN PREPARED FOR THE EXCLUSIVE USE OF THE CLIENT & PROJECT NAME LISTED ON THIS DRAWING ONLY.

REPRODUCTION, RELEASE OF UTILIZATION OF THE DRAWING CONTENT BY OTHER CLIENTS / FIRMS AND ON OTHER PROJECTS IS PROHIBITED BY LAW.

WESTON & SAMPSON RETAINS THE EXCLUSIVE USE OF THE INTELLECTUAL PROPERTY CONTAINED HEREIN.

Issued For:

BID DOCUMENTS

Scale:	AS NOTED
Date:	5/21/2021
Drawn By:	MEW
Reviewed By:	SHK
Approved By:	JWM
W&S Project No.:	2200740
W&S File No.:	-

Drawing Title:

CHEMICAL FEED SCHEMATICS

Sheet Number:

D602

COPYRIGHT 2019 WESTON & SAMPSON

P:\Mill\Blackstone MA\2200740 WTP Design\CAD\Blackstone - P66 Chem Feed Schematics.dwg

EXISTING CORROSION CONTROL FACILITY

WELL 7 160 GPM
WELL 8 160 GPM
WELL 6 50 GPM
FUTURE WELL 9 450 GPM
WELL5 90 GPM
WELL 4 100 GPM
WELL 2 100 GPM

TO SAMPLE SINK
AIT 100 / AE 100 pH
FIT 100
FLOW ELEMENT FE-100 0 TO 2000 GPM
SPARE
LSH 105
PIPE PIT

GREENSAND FILTERS
INFLUENT
AIR (FUTURE)
AIR BLOWER (FUTURE)
FILTER 110
FILTER 120
FILTER 130
FILTER 140 (FUTURE)
PDIT 110 / FIT 110 / FE-110
PDIT 120 / FIT 120 / FE-120
PDIT 130 / FIT 130 / FE-130
PDIT 140 / FIT 140 / FE-140
WASTE
EFFLUENT
RECYCLE

FIT 150
FLOW ELEMENT FE-150 0 TO 400 GPM
SNP-110 SUPERNATANT PUMP 135 GPM
SP-120 SUPERNATANT PUMP 135 GPM
VFD

FIT 160
FLOW ELEMENT FE-160 0 TO 400 GPM
SLUDGE
TO HAULING TRUCK
TO SEWER
SCP-110 SLUDGE COLLECTION PUMP 200 GPM
SCP-120 SLUDGE COLLECTION PUMP 200 GPM

BACKWASH WASTE BASINS TK-2 & TK-3 65,000 GAL.
LIT 110
LE-110
LE-120
LIT 120

FILTER BACKWASH SUPPLY WATER
AIT 110 / AE 110 Cl_2 RESIDUAL
AIT 140 / AE 140 TURBIDITY
SPARE
TO ANALYZERS

FUTURE POST-FILTER POLY/ORTHO
AE 120 / AIT 120 pH
AE 130 / AIT 130 Cl_2 RESIDUAL
TO ANALYZERS

FIT 180
SPARE
SPARE
FLOW ELEMENT FE-180 0 TO 2000 GPM
DISTRIBUTION SYSTEM
EFFLUENT
FIT 170
CV 100
FLOW ELEMENT FE-170 0 TO 2000 GPM
FINISHED WATER PUMP 1150 GPM
FINISHED WATER PUMP 1150 GPM
VFD
LE-100
LIT 100
BACKWASH SUPPLY BASIN (TK-1) 26,830 GAL.
FWP-110
FWP-120

LIT 140
LE 140
SODIUM HYDROXIDE STORAGE TANK
TRANSFER PUMP TP-101
FP-101 FEED PUMP
FEED PUMP FP-102
LSH 130
DAY TANK
LSH 150
HYDROXIDE AREA CONTAINMENT

LIT 130
LE 130
HYPO-CHLORITE STORAGE TANK
FEED PUMP FP-201
FEED PUMP FP-202
LSH 120
PRE DAY TANK
TRANSFER PUMP TP-201
LSH 160
HYPOCHLORITE AREA CONTAINMENT

FUTURE POLY/ORTHO
FP-301 FEED PUMP
FEED PUMP FP-302
LSH 140
DAY TANK

PROCESS FLOW SCHEMATIC
BLACKSTONE WATER TREATMENT PLANT

NOTE:

1. FOR ADDITIONAL INSTRUMENTS SUCH AS SINK, FIRE ALARM, SECURITY AND BUILDING SYSTEMS SEE PLUMBING, HVAC AND ELECTRICAL DRAWINGS.

Project:
TOWN OF BLACKSTONE, MASSACHUSETTS
DEPARTMENT OF PUBLIC WORKS
WATER TREATMENT PLANT
53 ELM STREET, BLACKSTONE, MASSACHUSETTS, 01504

Weston & Sampson
Weston & Sampson Engineers, Inc.
55 Walkers Brook Drive
Reading, MA, 01867
978.532.1900 800.SAMPSON
www.westonandsampson.com

Consultants:

Revisions:

No.	Date	Description

Seal:
COMMONWEALTH OF MASSACHUSETTS
JEFFREY W. McCLURE
CIVIL
No. 41836
REGISTERED PROFESSIONAL ENGINEER

COA:

"COPYRIGHT ©2021 BY WESTON & SAMPSON
THIS DRAWING HAS BEEN PREPARED FOR THE EXCLUSIVE USE OF THE CLIENT & PROJECT NAME LISTED ON THIS DRAWING ONLY.

REPRODUCTION, RELEASE OF UTILIZATION OF THE DRAWING CONTENT BY OTHER CLIENTS / FIRMS AND ON OTHER PROJECTS IS PROHIBITED BY LAW.

WESTON & SAMPSON RETAINS THE EXCLUSIVE USE OF THE INTELLECTUAL PROPERTY CONTAINED HEREIN.

Issued For:

BID DOCUMENTS

Scale:	AS NOTED
Date:	5/21/2021
Drawn By:	MEW
Reviewed By:	SHK
Approved By:	JWM
W&S Project No.:	2200740
W&S File No.:	-

Drawing Title:
PROCESS FLOW DIAGRAM

Sheet Number:
D603

Rev: 1.6 Date: 04/10/2019

COPYRIGHT 2019 WESTON & SAMPSON

\\wse02.local\WSE\Projects\MA\Blackstone MA\2200740 WTP Design\CAD\Blackstone - Process Flow Diagram.dwg

ABBREVIATIONS

Ø	DIAMETER	ID	INSIDE DIAMTER
ABV	ABOVE	IN	INCH
ACT	ACOUSTICAL CEILING TILE	INV	INVERT
AD	ACCESS DOOR	KW	KILOWATT
ADD	ADDENDUM	L	LENGTH
ADDTL	ADDITIONAL	LAV	LAVATORY-FIXTURE
AFF	ABOVE FINISHED FLOOR	LB	POUND
AFR	ABOVE FINISHED ROOF	LF	LINEAR FEET
ALT	ALTERNATE	LP	LOW POINT
AP	ACCESS PANEL	LPC	LIMIT OF PLUMBING CONTRACTOR
ARCH	ARCHITECT/ARCHITECTURAL	LPG	LIQUEFIED PETROLEUM GAS
AVG	AVERAGE	MAX	MAXIMUM
BFC	BELOW FINSIHED CEILING	MECH	MECHANICAL
BFF	BELOW FINISHED FLOOR	MEZZ	MEZZANINE
BFP	BACKFLOW PREVENTER	MFR	MANUFACTURER
BLDG	BUILDING	MIN	MINIMUM
BOP	BOTTOM OF PIPE	MISC	MISCELLANEOUS
BOS	BOTTOM OF STEEL	MTR	MOTOR
BSMT	BASEMENT	MU	MAKE-UP WATER
CA	COMPRESSED AIR	N/A	NOT APPLICABLE
CI	CAST IRON	NB	NICKEL BRONZE
CL	CENTERLINE	NC	NORMALLY CLOSED
CLG	CEILING	NIC	NOT IN CONTRACT
CO	CLEAN OUT	NG	NATURAL GAS
COL	COLUMN	NO	NUMBER
CONC	CONCRETE	NO	NORMALLY OPEN
CONT	CONTINUATION	NTS	NOT TO SCALE
CONTR	CONTRACTOR	OC	ON CENTER
CONN	CONNECTION	OCC	OCCUPIED
CP	CHROME PLATED	OD	OUTSIDE DIAMETER
CTW	CONNECT TO EXISITNG	P	PUMP
CW	COLD WATER	PC	PLUMBING CONTRACTOR
D	DRAIN	PH	PHASE
DEG	DEGREE	PLBG	PLUMBING
DIA	DIAMETER	POS	PROVIDED BY OTHER SECTION
DIM	DIMENSION	PRESS	PRESSURE
DN	DOWN	PRV	PRESSURE REDUCING VALVE
DWG	DRAWING	PSI	POUNDS PER SQUARE INCH
EA	EACH	PSIG	PSI GAUGE
EC	ELECTRICAL CONTRACTOR	PWR	POWER
ELEC	ELECTRICAL	QTY	QUANTITY
ELEV	ELEVATION	R	RADIUS
EQUIP	EQUIPMENT	RM	ROOM
ET	EXPANSION TANK	RPM	REVOLUTIONS PER MINUTE
EVAP	EVAPORATOR	SA	SHOCK ABSORBER
EWH	ELECTRIC WATER HEATER	SF	SQUARE FOOT
EXIST	EXISTING	SPECS	SPECIFICAITONS
FA	FREE AREA	SS	STAINLESS STEEL
FC	FLEXIBLE CONNECTION	TOP	TOP OF PIPE
FCO	FLOOR CLEANOUT	TOS	TOP OF STEEL
FFE	FINISHED FLOOR ELEVATION	TOT	TOTAL
P-#	FIXTURE NUMBER	TYP	TYPICAL
FL	FLOOR	U	URINAL-FIXTURE IDENTIFICATION
FS	FLOW SWITCH	UG	UNDERGROUND
FT	FOOT/FEET	UNO	UNLESS NOTED OTHERWISE
FV	FLUSH VALVE	V	VENT
G	GAS	V	VENT STACK
GA	GAUGE	V	VOLTS
GAL	GALLON	VEL	VELOCITY
GALV	GALVANIZED	VFD	VARIABLE FREQUENCY DRIVE
GC	GENERAL CONTRACTOR	VTR	VENT THROUGH ROOF
GWH	GAS WATER HEATER	W	WASTE
GPH	GALLONS PER HOUR	WH	WALL HYDRANT
GPM	GALLONS PER MINUTE	W	WIDTH
GRD	GRADE	W/	WITH
GWB	GYPSUM WALL BOARD	W/O	WITHOUT
HB	HOSE BIB	WC	WATER CLOSET-FIXTURE
HC	HANDICAPPED	WG	WATER GAUGE
HD	HEAD	°F	DEGREES FAHRENHEIT
HP	HORSE POWER		
HP	HIGH POINT		
HR	HOUR		
HT	HEIGHT		
HTG	HEATING		
HTR	HEATER		
HW	HOT WATER		
HWR	HOT WATER RETURN		

PLUMBING GENERAL NOTES

1. PLUMBING GENERAL NOTES APPLY TO ALL PLUMBING DRAWINGS. THE WORD "CONTRACTOR" USED IN "PLUMBING" WORK SHALL MEAN THE PLUMBING OR PLUMBING CONTRACTOR.
2. THIS PROJECT INVOLVES CONSTRUCTION INSIDE AN EXISTING STRUCTURE. CONTRACTORS, BY SUBMITTING A BID, ARE DEEMED TO BE COMPLETELY FAMILIAR WITH THE EXISTING CONDITION OF THE BUILDING AS IT INFLUENCES THE WORK DESCRIBED. ABSOLUTELY NO CLAIMS FOR EXTRA COMPENSATION WILL BE CONSIDERED FOR EXISTING CONDITIONS VISIBLE OR REASONABLY INFERABLE FROM A CAREFUL EXAMINATION OF THE EXISTING BUILDING.
3. THE CONTRACTOR SHALL INSPECT THE EXISTING FIELD CONDITIONS AT THE SITE AND ANY AVAILBLE "AS-BUILT" BASE BUILDING CONTRACT DOCUMENTS PRIOR TO THE START OF ANY WORK TO DETERMINE WHAT EFFECT THE EXISTING CONDITIONS WILL HAVE ON HIS WORK. POTENTIAL PROBLEM AREAS SHALL BE BROUGHT TO THE ATTENTION OF THE ARCHITECT AND/OR ENGINEER IMMEDIATELY.
4. THE CONTRACTOR SHALL BE RESPONSIBLE FOR FIELD VERIFYING, PRIOR TO FINAL BID, ALL EXISTING CONDITIONS FOR PLUMBING AND PLUMBING SYSTEMS WITHIN TENANT SPACE AND WITHIN CLOSE PROXIMITY OF TENANT SPACE.
5. THE CONTRACTOR SHALL CONNECT HIS WORK TO VARIOUS EXISTING PIPING, AND CONTROL SYSTEMS IN THE BASE BUILDING. THE NEW WORK SHALL BE COMPATIBLE WITH THE EXISTING SYSTEMS. LOCATION OF EQUIPMENT OR THE ROUTING OF THE VARIOUS SYSTEMS AS WELL AS OPENINGS IN FLOOR SLABS OR WALLS SHALL BE GOVERNED BY THE EXISTING CONDITIONS AS THEY APPEAR IN THE FIELD OR ON THE "AS-BUILT" DRAWINGS.
6. CARE SHALL BE TAKEN DURING THE INSTALLATION TO NOT DAMAGE OR INTERRUPT BUILDING SYSTEMS AND SERVICES THAT ARE ALREADY INSTALLED. DAMAGE TO SUCH SYSTEMS OR EQUIPMENT CAUSED BY THIS CONTRACTOR DURING INSTALLATION SHALL BE REPAIRED AND/OR REPLACED AT THIS CONTRACTOR'S EXPENSE TO THE COMPLETE SATISFACTION OF THE BUILDING OWNER.
7. SHUTDOWN OF EXISTING SYSTEMS FOR CONNECTION TO EXISTING SERVICES SHALL BE COORDINATED WITH THE CONSTRUCTION MANAGER OR GENERAL CONTRACTOR AND BUILDING OWNER. THIS CONTRACTOR SHALL SUBMIT REQUESTS, WHERE THEY AFFECT THE OPERATION OF THE BUILDING SYSTEMS, AT LEAST ONE WEEK IN ADVANCE OF ANY REQUIRED SHUTDOWN. THE ACTUAL SHUTDOWN PERIOD SHALL BE AS SHORT AS POSSIBLE AND AT A TIME MUTUALLY AGREEABLE TO THE BUILDING OWNER AND THE CONSTRUCTION MANAGER/GENERAL CONTRACTOR.
8. LOCATIONS OF PIPING AND EQUIPMENT AS INDICATED ON THE DRAWING, ARE APPROXIMATE AND SUBJECT TO MINOR ADJUSTMENTS IN THE FIELD. WORK SHALL BE COORDINATED WITH ALL OTHER TRADES TO AVOID INTERFERENCE IN THE FIELD.
9. ALL WORK SHALL BE COORDINATED WITH ALL TRADES INVOLVED. OFFSETS IN PIPING AND TRANSITIONS AROUND OBSTRUCTIONS SHALL BE PROVIDED AT NO ADDITIONAL COST TO THE OWNER.
10. VERIFY ALL EQUIPMENT CONNECTIONS WITH MANUFACTURER'S CERTIFIED DRAWINGS. VERIFY AND PROVIDE PIPE TRANSITIONS TO FURNISHED EQUIPMENT. FIELD VERIFY AND COORDINATE ALL DIMENSIONS BEFORE FABRICATION.
11. ALL MATERIALS AND EQUIPMENT UNLESS SPECIFICALLY INDICATED AS REUSED, SHALL BE NEW.
12. ACCESS PANELS SHALL BE PROVIDED TO ALLOW FOR SERVICING TRAP PRIMERS AND ALL CONCEALED PLUMBING EQUIPMENT.
13. WHEN SECTION OF PIPING IS NOT LABELED FOR SIZE, THE LARGER SIZE INDICATED ON THE CONNECTED PIPE SHALL PREVAIL.
14. THE FIRE PROOFING OF THE BUILDING STRUCTURE IS NOT TO BE REMOVED FOR THE INSTALLATION OF HANGERS, SUPPORTS, PIPING, ETC. IF FIRE PROOFING IS DAMAGED, IT SHALL BE REPAIRED AT THE EXPENSE OF THE TRADE.
15. THE CONTRACTOR SHALL TEST AND CALIBRATE ALL CONTROLS AND VERIFY ALL ARE FULLY FUNCTIONAL AND SUBMIT DOCUMENTATION. SEE SPECIFICATIONS FOR ADDITIONAL REQUIREMENTS.
16. THE CONTRACTOR SHALL PROVIDE AND SUBMIT DOCUMENTATION FOR PIPING PRESSURE AND LEAKAGE TESTS, OPERATING AND MAINTENANCE MANUALS, AND AS BUILT DRAWINGS. SEE SPECIFICATIONS FOR ADDITIONAL REQUIREMENTS.
17. REFER TO THE PROJECT SPECIFICATIONS FOR FURTHER REQUIREMENTS.
18. MANY EQUIPMENT SCHEDULES DO NOT LIST QUANTITIES. CONTRACTOR SHALL REFER TO ALL DRAWINGS AND PROVIDE THE REQUIRED QUANTITIES FOR ALL COMPONENTS.
19. IN ACCORDANCE WITH SPECIFICATION OF DIVISION 22, THE CONTRACTOR SHALL COORDINATE WITH ALL TRADES AND PREPARE COORDINATION DRAWINGS PRIOR TO INSTALLATION. COORDINATION DRAWINGS SHALL BE SUBMITTED TO THE OWNERS REPRESENTATIVE FOR REVIEW PRIOR TO INSTALLATION.
20. FINAL PRODUCT SHALL BE A COMPLETE AND FUNCTIONING SYSTEM, AND SHALL CONFORM TO ALL REQUIREMENTS OF APPLICABLE FEDERAL, STATE, AND LOCAL CODES, INCLUDING BUT NOT LIMITED TO THE INTERNATIONAL BUILDING CODE AND INTERNATIONAL PLUMBING CODE

PLUMBING NOTES

1. FIELD VERIFY ALL NEW WATER, WASTE, AND VENT PIPING CONNECTIONS AND PROVIDE NEW CONNECTIONS AS REQUIRED FOR PROPERLY OPERATING SYSTEMS.
2. PITCH UNDERFLOOR SANITARY WASTE PIPING AT 1/4" PER FOOT, UNLESS NOTED OTHERWISE.
3. FIELD VERIFY LOCATION AND INVERTS OF SITE UTILITIES PRIOR TO INSTALLATION.
4. ROUTE DOMESTIC WATER AND SANITARY SEWER SERVICES TO SITE UTILITIES 10'-0" FROM BUILDING UNLESS NOTED OTHERWISE. REFER TO CIVIL PLANS.
5. WASTE AND VENT PIPING BELOW FLOOR AND THROUGH FLOOR SHALL BE 2" MINIMUM.
6. PROVIDE CLEANOUT IN ACCESSIBLE LOCATION AT THE BASE OF ALL PLUMBING RISERS.
7. PROVIDE ISOLATION VALVES AT ALL PLUMBING FIXTURES.

CALLOUT SYMBOLS

	CONNECT TO EXISTING
	LIMIT OF DEMOLITION
A / H2.0	SECTION DESIGNATION
	SECTION SHEET NUMBER
1	REVISION NUMBER
	REMOVE EXISTING ITEM
WC-XX	FIXTURE TAG (REFER TO SCHEDULES FOR DETAILS)

NOTE: SOME OR ALL SYMBOLS MAY BE USED ON THIS PROJECT

PIPING LEGEND

	GATE VALVE (OUTSIDE SCREW AND YOKE UNLESS SPECIFIED OTHERWISE)
	BALL VALVE
	BUTTERFLY VALVE
	DRAIN VALVE WITH CAP AND CHAIN
	PLUG VALVE
	PRESSURE REDUCING VALVE
	CHECK VALVE (SILENT TYPE ON PUMP DISCHARGE)
	STRAINER WITH HOSE END BLOWOFF VALVE, CAP AND CHAIN
	RELIEF/SAFETY VALVE
	UNION
	BLIND FLANGE
	PIPE - CAPPED
	DIRECTION OF FLOW
	FLEXIBLE CONNECTOR
	PIPE CONNECTION - TOP
	PIPE CONNECTION - BOTTOM
	PIPE - DOWN
	PIPE - UP
R	PITCH OF PIPE - (R) RISE OR (D) DROP
	REDUCER - CONCENTRIC
	REDUCER - ECCENTRIC
	QUICK CLOSING VALVE, FUSIBLE LINK (USED WITH FUELS)
	PIPE BREAK (SINGLE LINE)
	DIRT LEG
CO	CLEANOUT
	PIPE - UP (DOUBLE LINE)
	PIPE - DOWN (DOUBLE LINE)
	PIPE BREAK (DOUBLE LINE)
	FLOOR DRAIN
TP	TRAP PRIMER
	FCO FLOOR CLEANOUT
	P-TRAP
HB	HOSE BIBB
WH	WALL HYDRANT

NOTE: SOME OR ALL SYMBOLS MAY BE USED ON THIS PROJECT

PIPING ABBREVIATIONS

CW	COLD WATER
G	NATURAL GAS
HW	HOT WATER
HW-R	HOT WATER RECIRCULATION
W	SOIL OR WASTE ABOVE GROUND
W	SOIL OR WASTE UNDERGROUND
TP	TRAP PRIMER ABOVE GROUND
TP	TRAP PRIMER UNDERGROUND
V	VENT ABOVE GROUND
V	VENT UNDERGROUND
(NAME)	REMOVE EXISTING PIPING

NOTE: SOME OR ALL SYMBOLS MAY BE USED ON THIS PROJECT

Project:

TOWN OF BLACKSTONE,
MASSACHUSETTS DEPARTMENT OF PUBLIC WORKS

WATER TREATMENT PLANT

53 ELM STREET, BLACKSTONE, MASSACHUSETTS, 01504

Weston & Sampson

Weston & Sampson Engineers, Inc.
55 Walkers Brook Drive, Suite 100
Reading, MA 01867
978.532.1900 800.SAMPSON

www.westonandsampson.com

Consultants:

Revisions:

No.	Date	Description

COA:

©COPYRIGHT ©2021 BY WESTON & SAMPSON
THIS DRAWING HAS BEEN PREPARED FOR THE EXCLUSIVE USE OF THE CLIENT & PROJECT NAME LISTED ON THIS DRAWING ONLY.

REPRODUCTION, RELEASE OF UTILIZATION OF THE DRAWING CONTENT BY OTHER CLIENTS / FIRMS AND ON OTHER PROJECTS IS PROHIBITED BY LAW.

WESTON & SAMPSON RETAINS THE EXCLUSIVE USE OF THE INTELLECTIAL PROPERTY CONTAINED HEREIN.

Seal:

COMMONWEALTH OF MASSACHUSETTS
MARY ELIZABETH REDDY
MECHANICAL
No. 38123
REGISTERED PROFESSIONAL ENGINEER

Mary Elizabeth Reddy

Issued For:

BID DOCUMENTS

Scale:

Key Plan:

Date:	05/21/21
Drawn By:	YK
Reviewed By:	MER
Approved By:	MER
W&S Project No.:	2200740
W&S File No.:	TBD

Drawing Title:

PLUMBING LEGENDS, NOTES AND ABBREVIATIONS

Sheet Number:

P000

5/28/2021 10:20:54 AM C:\Users\boodler\OneDrive - WESTON & SAMPSON ENGINEERS, Inc\Documents\2200740_ Blackstone WTP_Plumbing_V20_BoodleR.rvt

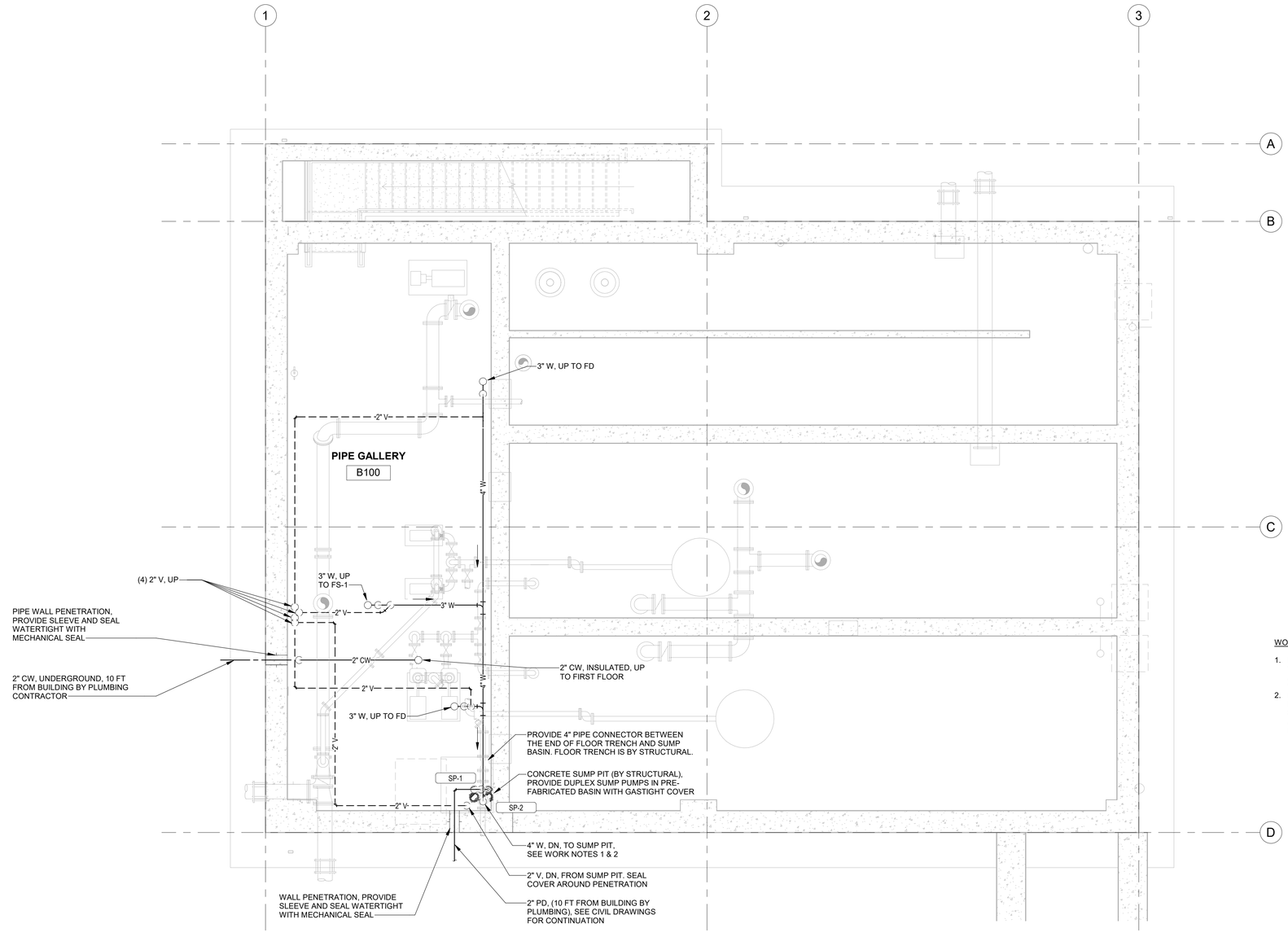

1 / P100A NEW BUILDING BASIN PLUMBING PLAN

1/4" = 1'-0"

0 2' 4' 8'

WORK NOTES:

1. FURNISH AND INSTALL ZOELLER TWO PUMP SYSTEM WITH VERTICAL OPERATED FLOAT SWITCHES AND HIGH WATER ALARM. PROVIDE 2" DISCHARGE PIPE, CHECK VALVES AND 2" VENT.
2. PROVIDE REMOTE CONTROL PANEL, WALL MOUNTED. SUMP PUMP SYSTEM SHALL BE CONTROLLED BY HIGH & LOW SWITCHES (SEPARATE FOR EACH PUMP), AND HIGH WATER ALARM SWITCH. CONNECT SUMP PUMP ALARM TO THE FACILITY DDC SYSTEM.

Project:

TOWN OF BLACKSTONE, MASSACHUSETTS DEPARTMENT OF PUBLIC WORKS

WATER TREATMENT PLANT

53 ELM STREET, BLACKSTONE, MASSACHUSETTS, 01504

Weston & Sampson

Weston & Sampson Engineers, Inc.
55 Walkers Brook Drive, Suite 100
Reading, MA 01867
978.532.1900 800.SAMPSON

www.westonandsampson.com

Consultants:

Revisions:

No.	Date	Description

COA:

"COPYRIGHT ©2021 BY WESTON & SAMPSON
THIS DRAWING HAS BEEN PREPARED FOR THE EXCLUSIVE USE OF THE CLIENT & PROJECT NAME LISTED ON THIS DRAWING ONLY.

REPRODUCTION, RELEASE OF UTILIZATION OF THE DRAWING CONTENT BY OTHER CLIENTS / FIRMS AND ON OTHER PROJECTS IS PROHIBITED BY LAW.

WESTON & SAMPSON RETAINS THE EXCLUSIVE USE OF THE INTELLECTIAL PROPERTY CONTAINED HEREIN.

Seal:

COMMONWEALTH OF MASSACHUSETTS
MARY ELIZABETH REDDY
MECHANICAL
No. 38123
REGISTERED PROFESSIONAL ENGINEER

Mary Elizabeth Reddy

Issued For:

BID DOCUMENTS

Scale:

Key Plan:

NORTH

Date:	05/21/21
Drawn By:	YK
Reviewed By:	MER
Approved By:	MER
W&S Project No.:	2200740
W&S File No.:	TBD

Drawing Title:

NEW BUILDING PLUMBING BASIN PLAN

Sheet Number:

P100A

5/28/2021 10:20:55 AM C:\Users\boodler\OneDrive - WESTON & SAMPSON ENGINEERS, Inc\Documents\2200740_ Blackstone WTP_Plumbing_V20_BoodleR.rvt

WORK NOTES:

1. NATURAL GAS PIPE TO THE BUILDING IS SIZED TO ACCOMMODATE FUTURE GAS-FIRED DOMESTIC WATER HEATER. EXTEND 1-1/4" GAS PIPE TO BOILERS. PROVIDE DIRT LEG AND VALVE.
2. (4) 2" V UP FROM PIPE GALLERY. CONNECT TO 2-1/2" V AT 18" (MINIMUM) ABOVE FLOOR, EXTEND 2-1/2" V UP. PROVIDE 3" VENT THROUGH ROOF. COORDINATE PLUMBING PIPE WITH PROCESS PIPING IN THIS AREA.

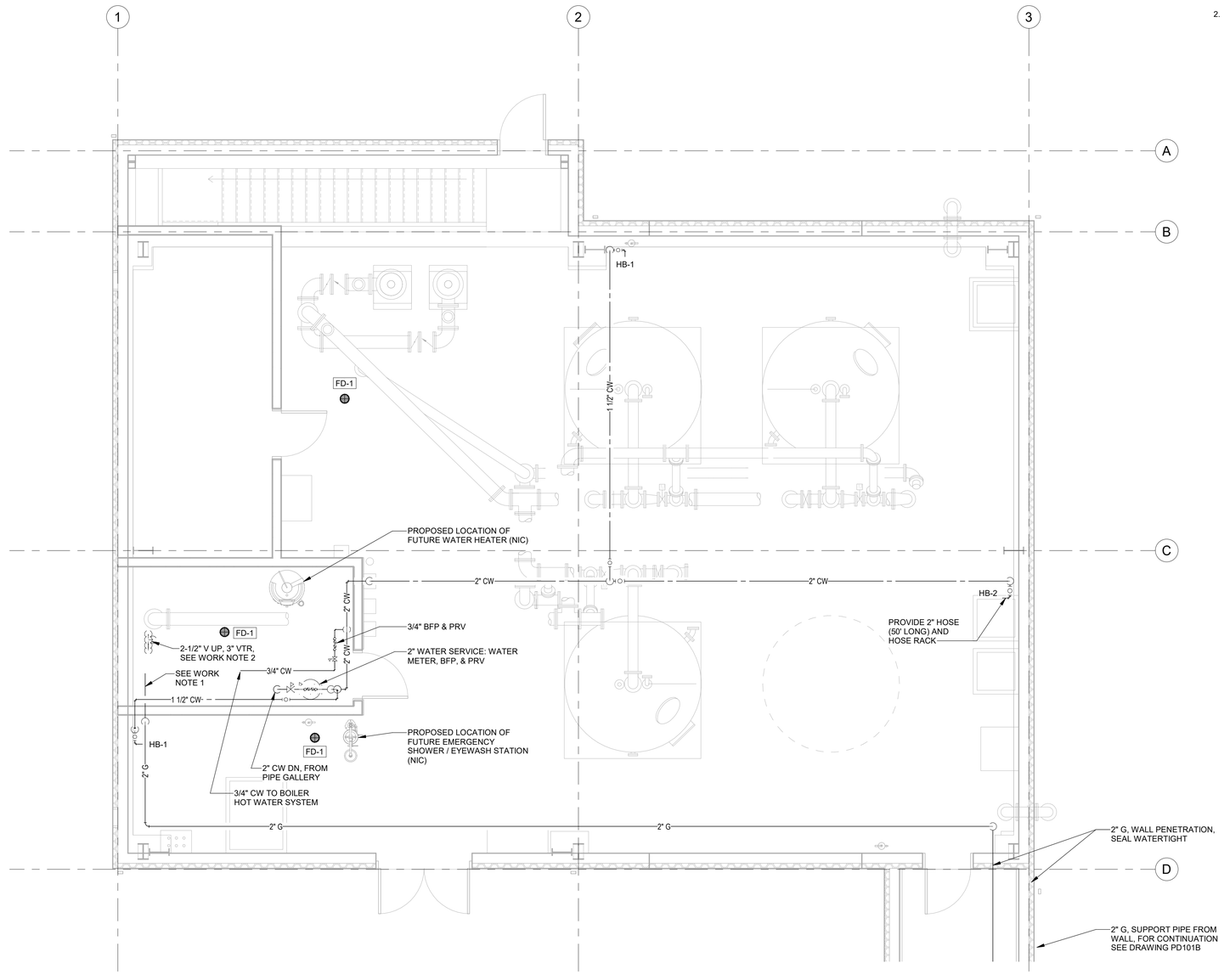

1 P101A NEW BUILDING FIRST FLOOR PLUMBING PLAN

1/4" = 1'-0"

0 2' 4' 8'

Project:

TOWN OF BLACKSTONE, MASSACHUSETTS DEPARTMENT OF PUBLIC WORKS

WATER TREATMENT PLANT

53 ELM STREET, BLACKSTONE, MASSACHUSETTS, 01504

Weston & Sampson

Weston & Sampson Engineers, Inc.
55 Walkers Brook Drive, Suite 100
Reading, MA 01867
978.532.1900 800.SAMPSON

www.westonandsampson.com

Consultants:

Revisions:

No.	Date	Description

COA:

"COPYRIGHT ©2021 BY WESTON & SAMPSON. THIS DRAWING HAS BEEN PREPARED FOR THE EXCLUSIVE USE OF THE CLIENT & PROJECT NAME LISTED ON THIS DRAWING ONLY.

REPRODUCTION, RELEASE OF UTILIZATION OF THE DRAWING CONTENT BY OTHER CLIENTS / FIRMS AND ON OTHER PROJECTS IS PROHIBITED BY LAW.

WESTON & SAMPSON RETAINS THE EXCLUSIVE USE OF THE INTELLECTUAL PROPERTY CONTAINED HEREIN.

Seal:

COMMONWEALTH OF MASSACHUSETTS
MARY ELIZABETH REDDY
MECHANICAL
No. 38123
REGISTERED PROFESSIONAL ENGINEER

Mary Elizabeth Reddy

Issued For:

BID DOCUMENTS

Scale:

Key Plan:

NORTH

Date:	05/21/21
Drawn By:	YK
Reviewed By:	MER
Approved By:	MER
W&S Project No.:	2200740
W&S File No.:	TBD

Drawing Title:

NEW BUILDING FIRST FLOOR PLUMBING PLAN

Sheet Number:

P101A

5/28/2021 10:20:56 AM C:\Users\boodler\OneDrive - WESTON & SAMPSON ENGINEERS, Inc\Documents\2200740_ Blackstone WTP_Plumbing_V20_BoodleR.rvt

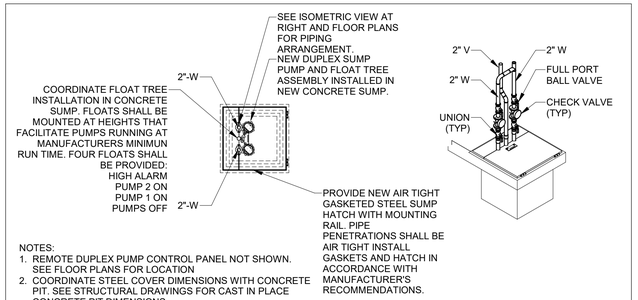

NOTES:
1. REMOTE DUPLEX PUMP CONTROL PANEL NOT SHOWN. SEE FLOOR PLANS FOR LOCATION
2. COORDINATE STEEL COVER DIMENSIONS WITH CONCRETE PIT. SEE STRUCTURAL DRAWINGS FOR CAST IN PLACE CONCRETE PIT DIMENSIONS.

1 P501 SUMP PUMPS DETAIL
NOT TO SCALE

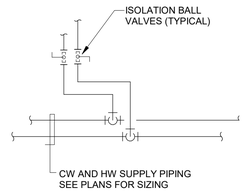

2 P501 TYP BRANCH PIPING DETAIL
NOT TO SCALE

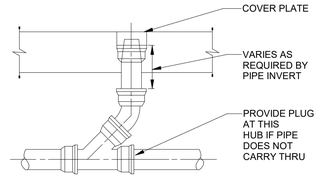

3 P501 CLEAN OUT AND PLUGGED RISER
NOT TO SCALE

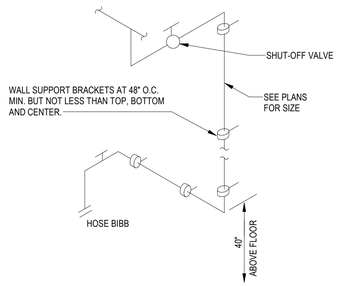

4 P501 INTERIOR HOSE BIBB PIPING RISER
NOT TO SCALE

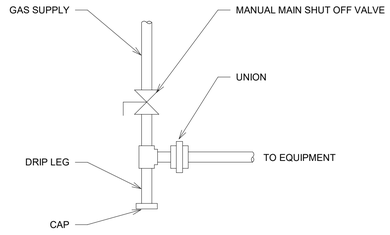

5 P501 GAS PIPING EQUIPMENT CONNECTION DETAIL
NOT TO SCALE

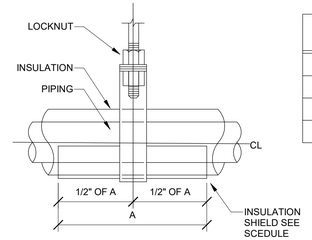

INSULATION SHIELD SCHEDULE		
PIPE SIZE	DIM. A	GA. OF STEEL
UP TO 4"	12"	18"
5" & 6"	18"	16"
ABOVE 6"	24"	14"

6 P501 PIPE HANGER/SHIELD DIAGRAM
NOT TO SCALE

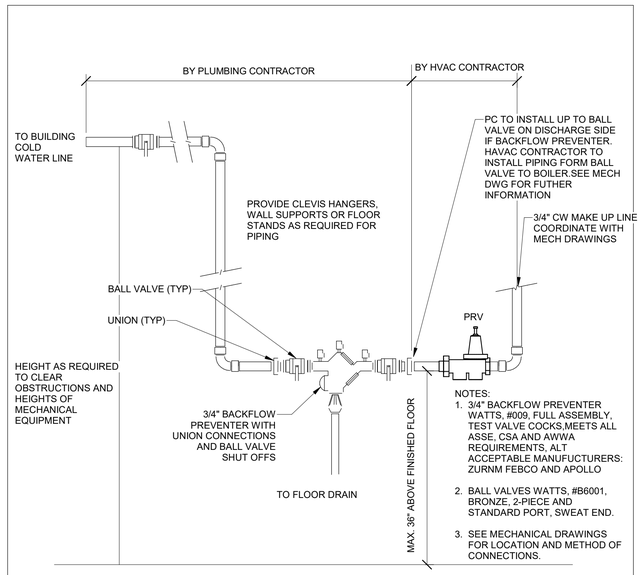

NOTES:
1. 3/4" BACKFLOW PREVENTER WATTS, #009, FULL ASSEMBLY, TEST VALVE COCKS.MEETS ALL ASSE, CSA AND AWWA REQUIREMENTS, ALT ACCEPTABLE MANUFUCTURERS: ZURNM FEBCO AND APOLLO
2. BALL VALVES WATTS, #B6001, BRONZE, 2-PIECE AND STANDARD PORT, SWEAT END.
3. SEE MECHANICAL DRAWINGS FOR LOCATION AND METHOD OF CONNECTIONS.

7 P501 BOILER MAKE UP WATER DETAIL
NOT TO SCALE

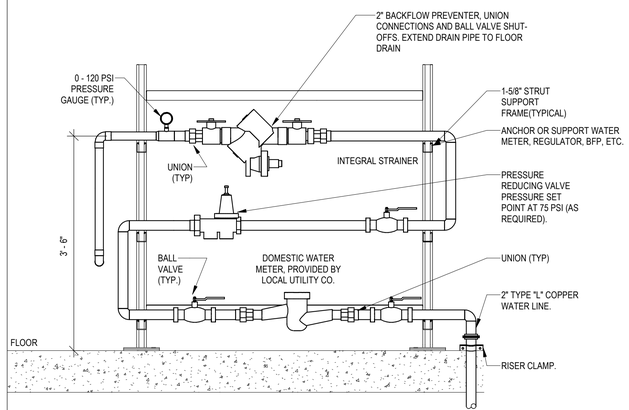

8 P501 WATER SERVICE DETAIL
NOT TO SCALE

Project:
TOWN OF BLACKSTONE, MASSACHUSETTS DEPARTMENT OF PUBLIC WORKS
WATER TREATMENT PLANT
53 ELM STREET, BLACKSTONE, MASSACHUSETTS, 01504

Weston & Sampson
Weston & Sampson Engineers, Inc.
55 Walkers Brook Drive, Suite 100
Reading, MA 01867
978.532.1900 800.SAMPSON
www.westonandsampson.com

Consultants:

Revisions:

No.	Date	Description

COA:
©COPYRIGHT ©2021 BY WESTON & SAMPSON
THIS DRAWING HAS BEEN PREPARED FOR THE EXCLUSIVE USE OF THE CLIENT & PROJECT NAME LISTED ON THIS DRAWING ONLY.
REPRODUCTION, RELEASE OF UTILIZATION OF THE DRAWING CONTENT BY OTHER CLIENTS / FIRMS AND ON OTHER PROJECTS IS PROHIBITED BY LAW.
WESTON & SAMPSON RETAINS THE EXCLUSIVE USE OF THE INTELLECTUAL PROPERTY CONTAINED HEREIN.

Seal:
COMMONWEALTH OF MASSACHUSETTS
MARY ELIZABETH REDDY
MECHANICAL
No. 38123
REGISTERED PROFESSIONAL ENGINEER

Issued For:
BID DOCUMENTS

Scale:

Key Plan:

Date:	05/21/21
Drawn By:	YK
Reviewed By:	MER
Approved By:	MER
W&S Project No.:	2200740
W&S File No.:	TBD

Drawing Title:
PLUMBING DETAILS

Sheet Number:
P501

5/28/2021 10:20:57 AM C:\Users\boodlerl\OneDrive - WESTON & SAMPSON ENGINEERS, Inc\Documents\2200740_ Blackstone WTP_Plumbing_V20_BoodlerR.rvt

PLUMBING FIXTURE SCHEDULE

SYMBOL	FIXTURE						FITTING			TRAP	CARRIER	FLOW RATE	REMARKS
	TYPE	MANUFACTURER	MODEL	LOCATION	DESCRIPTION	SIZE	MANUFACTURER	TYPE	SUPPLY				
HB-1	HOSE BIBB	-	-	NEW BUILDING	WALL FAUCET FOR EXPOSED PIPE CONNECTION	1-1/2"	-	-	1-1/2" CW	N/A	N/A	N/A	INTERIOR HOSE BIBB CONNECTION WITH BALL VALVE AND VACUUM BREAKER
HB-2	HOSE BIBB	-	-	NEW BUILDING	WALL FAUCET FOR EXPOSED PIPE CONNECTION	2"	-	-	2" CW	N/A	N/A	N/A	INTERIOR HOSE BIBB CONNECTION WITH BALL VALVE AND VACUUM BREAKER. PROVIDE 2" RUBBER HOSE (50 FT LONG) AND HOSE RACK
LS-1	LABORATORY SINK	EXISTING	EXISTING	EXISTING BUILDING	EXISTING	EXISTING	ZURN Z826U4-XL	LABORATORY FAUCET - DOUBLE	1/2" CW, 1/2" HW	N/A	N/A	2.2 GPM	POLISHED CHROME-PLATED DOUBLE BLANDE HANDLE, WITH INTEGRAL SHANK, 6" CENTERLINE RIGID GOOSENECK SPOUT WITH VACUUM BREAKER.
LS-2	LABORATORY SINK	EXISTING	EXISTING	EXISTING BUILDING	EXISTING	EXISTING	ZURN Z825U4-XL	LABORATORY FAUCET - SINGLE	1/2" CW	N/A	N/A	2.2 GPM	POLISHED CHROME-PLATED SINGLE BLANDE HANDLE, WITH INTEGRAL SHANK, 6" CENTERLINE RIGID GOOSENECK SPOUT WITH VACUUM BREAKER.
KS-1	KITCHEN SINK	EXISTING	EXISTING	EXISTING BUILDING	EXISTING	EXISTING	MOEN CA87528	KITCHEN FAUCET	1/2" CW, 1/2" HW	N/A	N/A	1.5 GPM	SINGLE-HANDLE LEVER FAUCET WITH IN DECK ESCUTCHEON.
SH-1	SHOWER	EXISTING	EXISTING	EXISTING BUILDING	EXISTING	EXISTING	AMERICAN STANDARD TU662	COMMERCIAL SHOWER SYSTEM	1/2" CW, 1/2" HW	N/A	N/A	1.5 GPM	SHOWER HEAD, DOUBLE CERAMIC PRESSURE BALANCE CARTRIDGE, CERAMIC MIXING VALVE AND BALANCING SPOOL, INTEGRATED CHECK VALVE, ADJUSTABLE HOT LIMIT SAFETY STOP, TRIM KIT WITH RED / BLUE INDICATOR RING.

REFER TO SPECIFICATIONS FOR ADDITIONAL INFORMATION

PLUMBING DRAIN SCHEDULE

SYMBOL	TYPE	MANUFACTURER	MODEL	OUTLET	STRAINER	LOCATION	REMARKS
FD-1	FLOOR DRAIN	WATTS	FD-100-A	NO HUB	8" DIAMETER, NICKEL BRONZE	NEW BUILDING	EPOXY COATED CAST IRON BODY, ADJUSTABLE ROUND STRAINER
FCO	FLOOR CLEANOUT	JR SMITH	4120	NO HUB	MEDIUM DUTY FINISHED FLOOR CLEAN OUT	NEW BUILDING MECHANICAL ROOM	CAST IRON BODY, ROUND NICKEL BRONZE TOP WITH THREADED SPANNER WRENCH COVER, TWIST TO FLOOR ADJUSTMENT

NOTES:
1. REFER TO SPECIFICATIONS FOR ADDITIONAL INFORMATION
2. BEFORE SETTING DRAINS, OBTAIN EXACT INFORMATION RELATIVE TO FINISH FLOOR LEVEL, FLOOR CONSTRUCTION AND SET TOP OF DRAINS AT FINISH FLOOR LEVEL.
3. SIZE OF DRAINS IS INDICATED ON THE DRAWINGS.

NATURAL GAS LOAD SUMMARY SCHEDULE

TAG	QTY	APPLIANCE	INPUT (MBH)	SUBTOTAL (MBH)	REQ'D PRESSURE (IN WC)	LOCATION
WH-1	1	DOMESTIC WATER HEATER (FUTURE)	200	200	5" - 14"	NEW BUILDING MECHANICAL ROOM
B-1	1	BOILER	100	100	5" - 14"	NEW BUILDING MECHANICAL ROOM
B-2	1	BOILER	100	100	5" - 14"	NEW BUILDING MECHANICAL ROOM
		TOTAL (MBH)		**400**		
GAS PIPE IS SIZED FOR NEW BUILDING ONLY. PIPE SIZING BASED ON A MAXIMUM DISTANCE OF 150' (225 EQUIVALENT FEET) @ 1/2 PSI OR LESS INLET PRESSURE AND 0.5" WC PRESSURE DROP.			PIPE SIZE	2"		

WATER HAMMER ARRESTOR SCHEDULE

SYMBOL	MANUFACTURER	MODEL	TYPE	PIPE SIZE	FIXTURE UNIT RANGE	VOLUME (CU IN)	REMARKS
WHA-A	SIOUX CHIEF	6562-A	PISTON	1/2"	1 -11	5	POLY PISTON WITH TWO EPDM O-RINGS LUBRICATED WITH FDA APPROVED SILICONE COMPOUND, LEAD FREE SOLDER JOINT, ANSI/ASSE 1010 CERTIFIED
WHA-B	SIOUX CHIEF	653-B	PISTON	3/4"	12 - 32	7	POLY PISTON WITH TWO EPDM O-RINGS LUBRICATED WITH FDA APPROVED SILICONE COMPOUND, LEAD FREE SOLDER JOINT, ANSI/ASSE 1010 CERTIFIED

REFER TO SPECIFICATIONS FOR ADDITIONAL INFORMATION

GRINDER AND SUMP PUMP SCHEDULE

ID	MANUFACTURER	MODEL NO.	TYPE	PUMP		MOTOR					REMARKS
				FLOW	HEAD	POWER	RPM	FLA	VOLT	PH	
SP-1	ZOELLER	G284	SUBMERSIBLE SUMP PUMP	60 GPM	25.0 FT	1.00 hp	1750	3 A	460 V	3	1 THROUGH 8
SP-2	ZOELLER	G284	SUBMERSIBLE SUMP PUMP	60 GPM	25.0 FT	1.00 hp	1750	3 A	460 V	3	1 THROUGH 8

NOTES:
1. REFER TO SPECIFICATIONS, DETAILS, AND CONTROL DIAGRAMS FOR ADDITIONAL INFORMATION.
2. PUMP SHALL BE CAST IRON WITH POWDER COATED EPOXY FINISH, PRESSURE-TESTED, OIL FILLED COOLING.
3. PUMP SHALL BE AUTOMATICALLY CONTROLLED WITH DUPLEX PUMP CONTROLLER, (4) FLOAT TREE ASSEMBLY, AND 2-POLE MECHANICAL SWITCH.
4. PRIVIDE VISUAL AND AUDIBLE HIGH VOLUME ALARM WITH OUTPUT TO SCADA.
5. PUMP SHALL BE DESIGNED TO PASS 2" SPHERICAL SOLIDS.
6. PROVIDE AUTO RESET THERMAL OVERLOAD MOTOR PROTECTION AND DISCONNECT SWITCH.
7. PROVIDE PRE-FABRICATED FIBERGLASS BASIN WITH GASTIGHT COVER.
8. CORD SHALL BE UL LISTED, 3-WIRE.

5/28/2021 10:20:58 AM C:\Users\boodler\OneDrive - WESTON & SAMPSON ENGINEERS, Inc\Documents\2200740_ Blackstone WTP_Plumbing_V20_BoodlerR.rvt

Project:
TOWN OF BLACKSTONE, MASSACHUSETTS DEPARTMENT OF PUBLIC WORKS
WATER TREATMENT PLANT
53 ELM STREET, BLACKSTONE, MASSACHUSETTS, 01504

Weston & Sampson
Weston & Sampson Engineers, Inc.
55 Walkers Brook Drive, Suite 100
Reading, MA 01867
978.532.1900 800.SAMPSON
www.westonandsampson.com

Consultants:

Revisions:

No.	Date	Description

COA:

©COPYRIGHT ©2021 BY WESTON & SAMPSON
THIS DRAWING HAS BEEN PREPARED FOR THE EXCLUSIVE USE OF THE CLIENT & PROJECT NAME LISTED ON THIS DRAWING ONLY.
REPRODUCTION, RELEASE OF UTILIZATION OF THE DRAWING CONTENT BY OTHER CLIENTS / FIRMS AND ON OTHER PROJECTS IS PROHIBITED BY LAW.
WESTON & SAMPSON RETAINS THE EXCLUSIVE USE OF THE INTELLECTUAL PROPERTY CONTAINED HEREIN.

Seal:
COMMONWEALTH OF MASSACHUSETTS
MARY ELIZABETH REDDY
MECHANICAL
No. 38123
REGISTERED PROFESSIONAL ENGINEER

Issued For:
BID DOCUMENTS

Scale:

Key Plan:

Date:	05/21/21
Drawn By:	YK
Reviewed By:	MER
Approved By:	MER
W&S Project No.:	2200740
W&S File No.:	TBD

Drawing Title:
PLUMBING SCHEDULES

Sheet Number:
P601

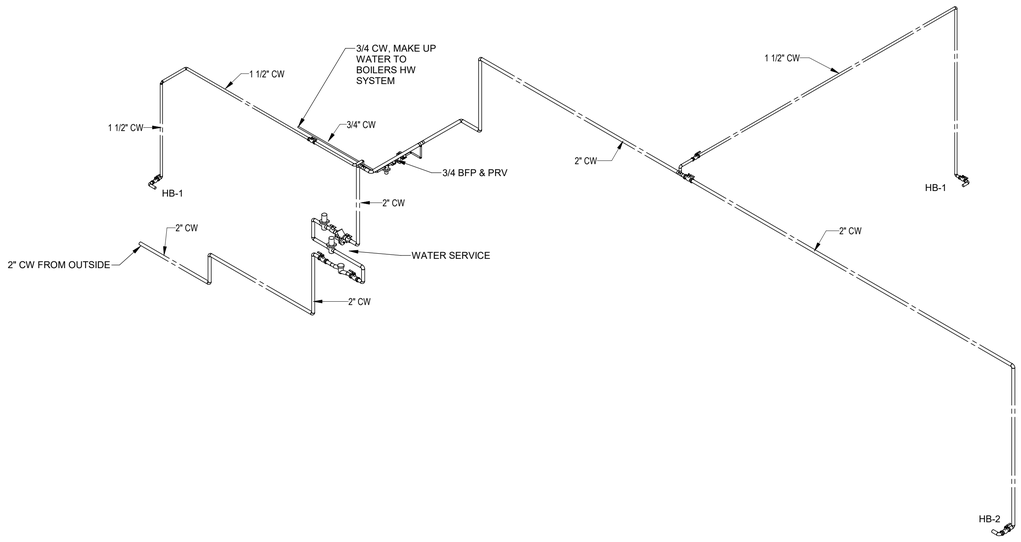

1 P701 DOMESTIC WATER RISER DIAGRAM

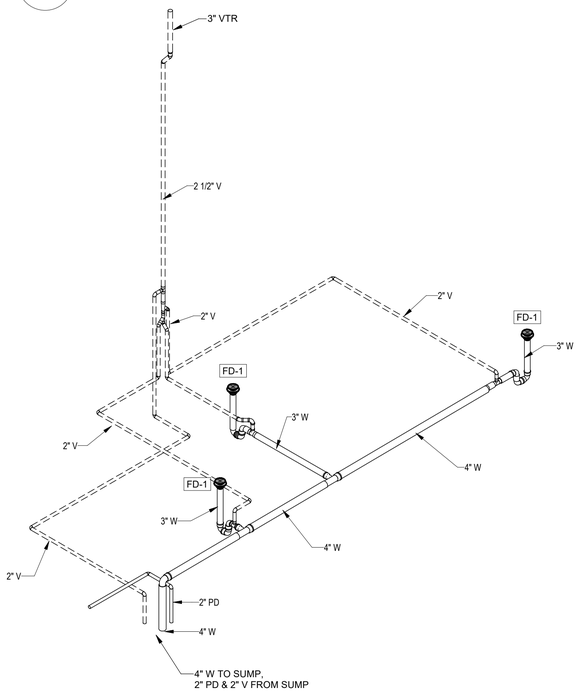

2 P701 WASTE AND VENTS RISER DIAGRAM

5/28/2021 10:20:59 AM C:\Users\boodlerl\OneDrive - WESTON & SAMPSON ENGINEERS, Inc\Documents\2200740_ Blackstone WTP_Plumbing_ V20_BoodleR.rvt

Project:

TOWN OF BLACKSTONE, MASSACHUSETTS DEPARTMENT OF PUBLIC WORKS

WATER TREATMENT PLANT

53 ELM STREET, BLACKSTONE, MASSACHUSETTS, 01504

Weston & Sampson

Weston & Sampson Engineers, Inc.
55 Walkers Brook Drive, Suite 100
Reading, MA 01867
978.532.1900 800.SAMPSON

www.westonandsampson.com

Consultants:

Revisions:

No.	Date	Description

COA:

©COPYRIGHT ©2021 BY WESTON & SAMPSON
THIS DRAWING HAS BEEN PREPARED FOR THE EXCLUSIVE USE OF THE CLIENT & PROJECT NAME LISTED ON THIS DRAWING ONLY.

REPRODUCTION, RELEASE OF UTILIZATION OF THE DRAWING CONTENT BY OTHER CLIENTS / FIRMS AND ON OTHER PROJECTS IS PROHIBITED BY LAW.

WESTON & SAMPSON RETAINS THE EXCLUSIVE USE OF THE INTELLECTIAL PROPERTY CONTAINED HEREIN.

Seal:

COMMONWEALTH OF MASSACHUSETTS
MARY ELIZABETH REDDY
MECHANICAL
No. 38123
REGISTERED PROFESSIONAL ENGINEER

Mary Elizabeth Reddy

Issued For:

BID DOCUMENTS

Scale:

Key Plan:

Date:	05/21/21
Drawn By:	YK
Reviewed By:	MER
Approved By:	MER
W&S Project No.:	2200740
W&S File No.:	TBD

Drawing Title:

DOMESTIC WATER RISER DIAGRAM AND WASTE AND VENTS RISER DIAGRAM

Sheet Number:

P701

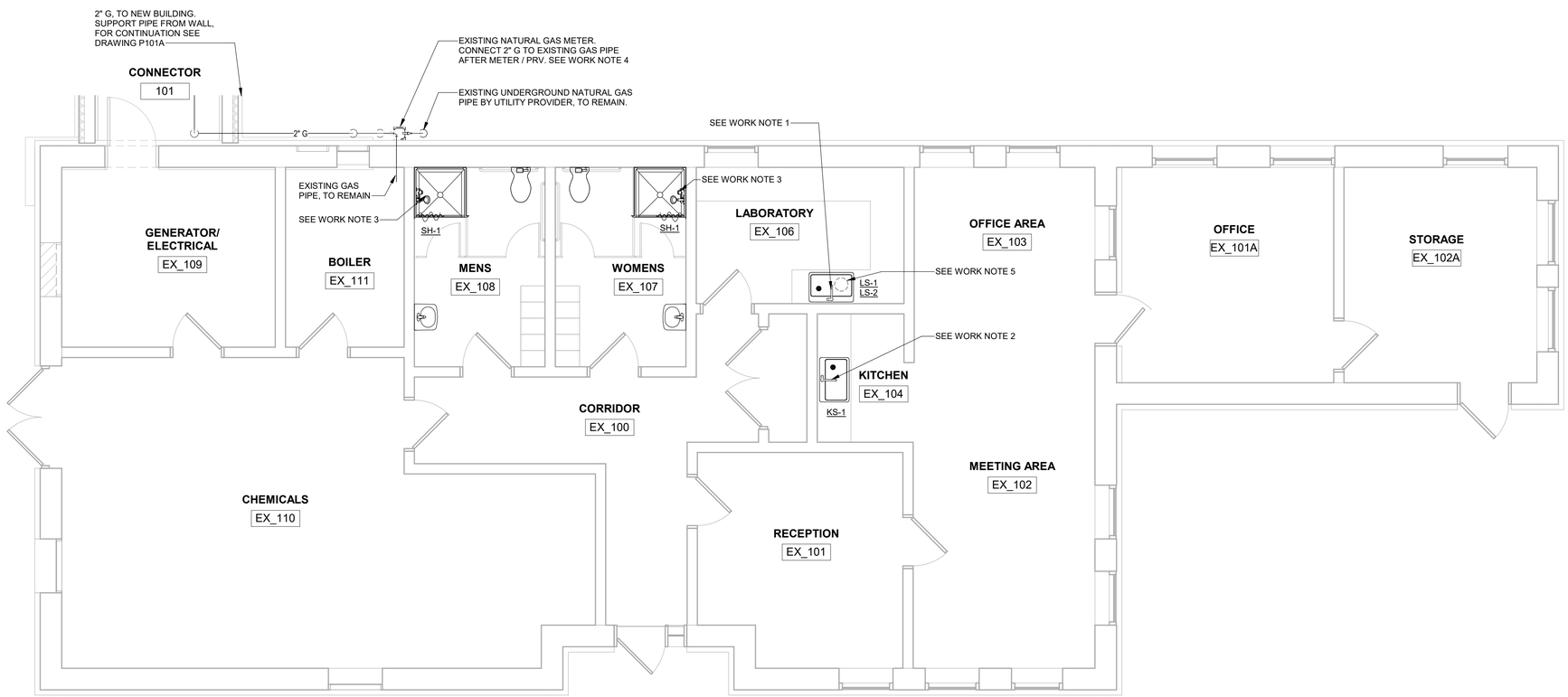

1 PD101B

EXISTING BUILDING FIRST FLOOR PLAN

1/4" = 1'-0"

0 2' 4' 8'

WORK NOTES:

1. EXISTING LABORATORY SINK, TO REMAIN. REMOVE AND DISPOSE OF (3) EXISTING LABORATORY SINK FAUCETS. PROVIDE THREE (3) NEW LABORATORY SINK FAUCETS, CONNECT TO EXISTING CW AND HW PIPING. LABORATORY FAUCETS SHALL BE DECK MOUNTED WITH INTEGRAL SHANK, 6" GOOSENECK, AERATOR AND WRISTBLADE HANDLES. ONE (1) NEW FAUCET LS-1 SHALL BE DOUBLE WRISTBLADE MIXING TYPE. TWO (2) NEW FAUCETS LS-2 SHALL BE SINGLE WRISTBLADE TYPE.
2. EXISTING KITCHEN SINK, TO REMAIN. REMOVE AND DISPOSE OF EXISTING KITCHEN SINK FAUCET. PROVIDE NEW KITCHEN SINK FAUCET KS-1, CONNECT TO EXISTING CW AND HW PIPING.
3. EXISTING SHOWER ENCLOSURES, TO REMAIN. REMOVE AND DISPOSE OF TWO (2) EXISTING SHOWER VALVES AND SHOWER HEADS. PROVIDE NEW PRESSURE BALANCED SHOWER VALVES AND SHOWER HEADS SH-1, CONNECT TO EXISTING CW AND HW PIPING.
4. PLUMBING CONTRACTOR SHALL CONTACT THE UTILITY PROVIDER FOR EVALUATION OF EXISTING GAS METER / PRESSURE REGULATOR. UTILITY PROVIDER SHALL REPLACE GAS METER / PRV AS REQUIRED TO ACCOMMODATE GAS LOAD FOR TWO BUILDINGS - EXISTING AND NEW.
5. REMOVE AND DISPOSE OF EXISTING NEUTRALIZATION TANK UNDER THE LABORATORY SINK. RECONNECT EXISTING SANITARY WASTE PIPING. PROVIDE NEW PIPING AS REQUIRED FOR RECONNECTION.

5/28/2021 10:21:01 AM C:\Users\boodlerr\OneDrive - WESTON & SAMPSON ENGINEERS, Inc\Documents\2200740_ Blackstone WTP_Plumbing_V20_BoodlerR.rvt

Project:

TOWN OF BLACKSTONE, MASSACHUSETTS DEPARTMENT OF PUBLIC WORKS

WATER TREATMENT PLANT

53 ELM STREET, BLACKSTONE, MASSACHUSETTS, 01504

Weston & Sampson

Weston & Sampson Engineers, Inc.
55 Walkers Brook Drive, Suite 100
Reading, MA 01867
978.532.1900 800.SAMPSON

www.westonandsampson.com

Consultants:

Revisions:

No.	Date	Description

COA:

"COPYRIGHT ©2021 BY WESTON & SAMPSON
THIS DRAWING HAS BEEN PREPARED FOR THE EXCLUSIVE USE OF THE CLIENT & PROJECT NAME LISTED ON THIS DRAWING ONLY.

REPRODUCTION, RELEASE OF UTILIZATION OF THE DRAWING CONTENT BY OTHER CLIENTS / FIRMS AND ON OTHER PROJECTS IS PROHIBITED BY LAW.

WESTON & SAMPSON RETAINS THE EXCLUSIVE USE OF THE INTELLECTIAL PROPERTY CONTAINED HEREIN.

Seal:

COMMONWEALTH OF MASSACHUSETTS
MARY ELIZABETH REDDY
MECHANICAL
No. 38123
REGISTERED PROFESSIONAL ENGINEER

Issued For:

BID DOCUMENTS

Scale:

Key Plan:

NORTH

Date:	05/21/21
Drawn By:	YK
Reviewed By:	MER
Approved By:	MER
W&S Project No.:	2200740
W&S File No.:	TBD

Drawing Title:

EXISTING BUILDING FLOOR PLAN

Sheet Number:

PD101B

ELECTRICAL ABBREVIATIONS LIST

1P	1 POLE (2P, 3P, 4P, ETC.)	AS	AMP SWITCH	CMPR	COMPRESSOR	DS	SAFETY DISCONNECT SWITCH	FIXT	FIXTURE	HTG	HEATING	LTG	LIGHTING	MOA	MULTIOUTLET ASSEMBLY	PA	PUBLIC ADDRESS	RM	ROOM	SYM	SYMMETRICAL	V	VOLT	∠	ANGLE
A	AMPERE	AT	AMP TRIP	CONN	CONNECTION	DT	DOUBLE THROW	FLR	FLOOR	HTR	HEATER	LTNG	LIGHTNING	MSP	MOTOR STARTER PANELBOARD	PB	PULL BOX OR PUSHBUTTON	RSC	RIGID STEEL CONDUIT	SYS	SYSTEM	VA	VOLT-AMPERES	@	AT
AC	ABOVE COUNTER OR AIR CONDITIONER	ATS	AUTOMATIC TRANSFER SWITCH	CONST	CONSTRUCTION	DWG	DRAWING	FLUOR	FLUORESCENT	HV	HIGH VOLTAGE	LV	LOW VOLTAGE	MSBD	MAIN SWITCHBOARD	PE	PNEUMATIC ELECTRIC	RTU	ROOF TOP UNIT	TEL	TELEPHONE	VDT	VIDEO DISPLAY TERMINAL	Δ	DELTA
		AUTO	AUTOMATIC	CONT	CONTINUATION OR CONTINUOUS	EC	ELECTRICAL CONTRACTOR	FU	FUSE	HVAC	HEATING, VENTILATING AND AIR CONDITIONING	MAX	MAXIMUM	MT	MOUNT	PED	PEDESTAL	SC	SURFACE CONDUIT	TEL/DATA	TELEPHONE/DATA	VERT	VERTICAL	'	FEET
ACLG	ABOVE CEILING	AUX	AUXILIARY	CONTR	CONTRACTOR	ELEC	ELECTRIC, ELECTRICAL	FUDS	FUSED SAFETY DISCONNECT SWITCH			MAG.S	MAGNETIC STARTER	MT.C	EMPTY CONDUIT	PF	POWER FACTOR	SEC	SECONDARY	TERM	TERMINAL	VFD	VARIABLE FREQUENCY DRIVE	"	INCHES
ADO	AUTOMATIC DOOR OPENER	AV	AUDIO VISUAL	CONV	CONVECTOR	ELEV	ELEVATOR	GA	GAUGE	HWP	HYDRONIC WATER PUMP	M/C	MOMENTARY CONTACT	MTS	MANUAL TRANSFER SWITCH	PH	PHASE	SHT	SHEET	TL	TWIST LOCK	VOL	VOLUME	#	NUMBER
AF	AMP FRAME	AWG	AMERICAN WIRE GAUGE	CP	CIRCULATING PUMP	EM	EMERGENCY	GAL	GALLON	IC	INTERRUPTING CAPACITY	MC	MECHANICAL CONTRACTOR	MTR	MOTOR, MOTORIZED	PIV	POST INDICATING VALVE	SIM	SIMILAR	TR	TAMPER RESISTANT	W	WATT	Ø	PHASE
AFF	ABOVE FINISHED FLOOR	BATT	BATTERY	CRT	CATHODE-RAY TUBE	EMS	ENERGY MANAGEMENT SYSTEM	GALV	GALVANIZED	IG	ISOLATED GROUND	MCB	MAIN CIRCUIT BREAKER	N.C	NORMALLY CLOSED	PNL	PANEL	S/N	SOLID NEUTRAL	T-STAT	THERMOSTAT	W/	WITH	C	CENTER LINE
AFG	ABOVE FINISHED GRADE	BD	BOARD	CT	CURRENT TRANSFORMER	EMT	ELECTRICAL METALLIC TUBING	GC	GENERAL CONTRACTOR	IMC	INTERMEDIATE METAL CONDUIT	MCC	MOTOR CONTROL CENTER	NEC	NATIONAL ELECTRICAL CODE	PP	POWER POLE	SPEC	SPECIFICATION	TTC	TELEPHONE TERMINAL CABINET	WG	WIRE GUARD	P	PLATE
AFI	ARC FAULT CIRCUIT INTERRUPTER	BLDG	BUILDING	CTR	CENTER	EP	ELECTRIC PNEUMATIC	GEN	GENERATOR	INCAND	INCANDESCENT	MDC	MAIN DISTRIBUTION CENTER	NEMA	NATIONAL ELECTRICAL MANUFACTURER'S ASSOCIATION	PR	PAIR	SPKR	SPEAKER	TV	TELEVISION	WH	WATER HEATER		
		BMS	BUILDING MANAGEMENT SYSTEM	CU	COPPER	EQUIP	EQUIPMENT	GFI	GROUND FAULT CIRCUIT INTERRUPTER	IR	INFRARED	MDP	MAIN DISTRIBUTION PANEL			PRI	PRIMARY	SP	SPARE	TVTC	TELEVISION TERMINAL CABINET	W/O	WITHOUT		
AHU	AIR HANDLING UNIT	C	CONDUIT	DCP	DOMESTIC WATER CIRCULATING PUMP	EWC	ELECTRIC WATER COOLER	GFP	GROUND FAULT PROTECTOR	I/W	INTERLOCK WITH	MFR	MANUFACTURER	NFDS	NON-FUSED SAFETY DISCONNECT SWITCH	PROJ	PROJECTION	SR	SURFACE RACEWAY	TYP	TYPICAL	WP	WEATHERPROOF		
AL	ALUMINUM	CAB	CABINET			EXIST	EXISTING	GND	GROUND	J-BOX	JUNCTION BOX	MFS	MAIN FUSED DISCONNECT SWITCH			PRV	POWER ROOF VENTILATOR	SS	STAINLESS STEEL	UC	UNDER COUNTER	XFMR	TRANSFORMER		
ALT	ALTERNATE	CAT	CATALOG	DEPT	DEPARTMENT	EXH	EXHAUST	GRS	GALVANIZED RIGID STEEL (CONDUIT)	KV	KILOVOLT	MH	MANHOLE	NIC	NOT IN CONTRACT	PT	POTENTIAL TRANSFORMER	SSW	SELECTOR SWITCH	UE	UNDERGROUND ELECTRICAL	XFR	TRANSFER		
AMP	AMPERE	CATV	CABLE TELEVISION	DET	DETAIL	EXP	EXPLOSION PROOF	GYP BD	GYPSUM BOARD	KVA	KILOVOLT-AMPERE	MIC	MICROPHONE	NL	NIGHT LIGHT	PVC	POLYVINYL CHLORIDE (CONDUIT)	S/S	STOP/START PUSHBUTTONS	UG	UNDERGROUND				
AMPL	AMPLIFIER	CB	CIRCUIT BREAKER	DIA	DIAMETER	FA	FIRE ALARM	HOA	HANDS-OFF-AUTOMATIC SWITCH	KVAR	KILOVOLT-AMPERE REACTIVE	MIN	MINIMUM	N.O.	NORMALLY OPEN	PWR	POWER	STA	STATION	UH	UNIT HEATER				
ANNUN	ANNUNCIATOR	CCTV	CLOSED CIRCUIT TELEVISION	DISC	DISCONNECT	FABP	FIRE ALARM BOOSTER POWER SUPPLY PANEL	HORIZ	HORIZONTAL	KW	KILOWATT	MISC	MISCELLANEOUS	NPF	NORMAL POWER FACTOR	QUAN	QUANTITY	STD	STANDARD	UT	UNDERGROUND TELEPHONE				
APPROX	APPROXIMATELY	CKT	CIRCUIT	DIST	DISTRIBUTION			HP	HORSEPOWER	KWH	KILOWATT HOUR	MLO	MAIN LUGS ONLY	NTS	NOT TO SCALE	RCPT	RECEPTACLE	SURF	SURFACE MOUNTED	UTIL	UTILITY				
AQ-STAT	AQUASTAT	CLG	CEILING	DN	DOWN	FACP	FIRE ALARM CONTROL PANEL	HPF	HIGH POWER FACTOR	LOC	LOCATE OR LOCATION	MMS	MANUAL MOTOR STARTER	OH	OVERHEAD	REQD	REQUIRED	SW	SWITCH	UV	UNIT VENTILATOR OR ULTRAVIOLET				
ARCH	ARCHITECT, ARCHITECTURAL	COMB	COMBINATION	DPR	DAMPER	FCU	FAN COIL UNIT	HT	HEIGHT	LT	LIGHT	MOA	MULTIOUTLET ASSEMBLY	OL	OVERLOADS	RM	ROOM	SWBD	SWITCHBOARD						

RACEWAY AND WIRING

- 1,3 LP1B — HOMERUN TO PANELBOARD, NUMBER OF TICKS INDICATES NUMBER OF #12 AWG CONDUCTORS CONTAINED IN RACEWAY. TWO (2) #12 AWG SHALL NOT BE INDICATED BY TICKS, NUMERALS 1 AND 3 INDICATE CIRCUITS IN PANELBOARD. RACEWAYS LARGER THAN 1/2" AND CONDUCTORS LARGER THAN #12 AWG SHALL BE INDICATED ON THE DRAWINGS. PROVIDE AN INSULATED GREEN GROUND WIRE IN ALL RACEWAYS MINIMUM SIZE TO BE #12AWG.
- RACEWAY CONCEALED IN CEILING OR WALLS
- RACEWAY EXPOSED
- RACEWAY CONCEALED IN SLAB OR LOCATED IN THE CEILING OF THE FLOOR BELOW
- RACEWAY TURNING UP
- RACEWAY TURNING DOWN
- FLEXIBLE CONNECTION
- DIRECT HARD WIRED CONNECTION
- P — UNDERFLOOR POWER DUCT
- T — UNDERFLOOR TELEPHONE DUCT

ONE-LINE POWER DIAGRAM SYMBOLS

- GROUND - SYSTEM AND/OR EQUIPMENT
- 3 PHASE, 3 WIRE DELTA CONNECTION
- 3 PHASE, 3 WIRE WYE CONNECTION (UNGROUNDED)
- 3 PHASE, 4 WIRE WYE CONNECTION (GROUNDED NEUTRAL)
- -A — LIGHTNING ARRESTOR AND GROUNDING
- CIRCUIT BREAKER
- ST — SHUNT TRIP
- AUTOMATIC TRANSFER SWITCH

RECEPTACLE LEGEND
(MOUNT 18" AFF TO CENTER LINE UNLESS NOTED OTHERWISE)

- DUPLEX CONVENIENCE OUTLET RATED 20A, 125V, U-SLOT GROUNDED TYPE MOUNTED 18" ABOVE FINISHED FLOOR TO CENTER LINE. ALL OTHER MOUNTING HEIGHTS SHALL BE AS NOTED ADJACENT TO THE SYMBOL. REFER TO RECEPTACLE ABBREVIATIONS FOR SPECIAL PURPOSE RECEPTACLES.
- DOUBLE DUPLEX CONVENIENCE OUTLET RATED 20A, 125V, U-SLOT GROUNDED TYPE MOUNTED 18" ABOVE FINISHED FLOOR TO CENTER LINE. ALL OTHER MOUNTING HEIGHTS SHALL BE AS NOTED ADJACENT TO THE SYMBOL. REFER TO RECEPTACLE ABBREVIATIONS FOR SPECIAL PURPOSE RECEPTACLES.
- DUPLEX CONVENIENCE OUTLET MOUNTED ABOVE COUNTER OR BENCHTOP - 20A, 125V, U-SLOT GROUNDED TYPE MOUNTED 6" ABOVE COUNTERTOP OR BENCHTOP. ALL OTHER MOUNTING HEIGHTS SHALL BE AS NOTED ON THE DRAWINGS. REFER TO RECEPTACLE ABBREVIATIONS FOR SPECIAL PURPOSE RECEPTACLES.

NEMA AREA CLASSIFICATIONS

PIPE GALLERY	NEMA 4
FILTER ROOM	NEMA 4
ELECTRICAL ROOM	NEMA 1
MECHANICAL ROOM	NEMA 4
OUTSIDE	NEMA 3R/4

DRAWING LIST

E001	ELECTRICAL TITLE SHEET
E002	ELECTRICAL GENERAL NOTES
E003	ELECTRICAL SITE PLANS
E101	ELECTRICAL LIGHTING PLANS
E201	ELECTRICAL POWER PLANS
E202	EXISTING CORROSION CONTROL FACILITY ELECTRICAL PLANS
E401	ELECTRICAL WELL PLANS SHEET I - ALTERNATE NO.1
E402	ELECTRICAL WELL PLANS SHEET II - ALTERNATE NO.1
E501	ELECTRICAL DETAILS SHEET I
E502	ELECTRICAL DETAILS SHEET II
E601	ELECTRICAL ONE LINE DIAGRAMS
E602	ELECTRICAL SCHEDULES SHEET I
E603	ELECTRICAL SCHEDULES SHEET II
FA101	FIRE ALARMS PLANS

LIGHTING/LIGHTING CONTROL LEGEND

- W 1,c — WALL MOUNTED LED FIXTURE. "W" DENOTES FIXTURE TYPE, NUMERAL DENOTES CIRCUIT NUMBER, "c" SUBSCRIPT DENOTES SWITCH CONTROL WHERE SHOWN.
- WE 1,c — WALL MOUNTED EMERGENCY LED FIXTURE WITH EMERGENCY BATTERY BACKUP BALLAST. PROVIDE THIRD WIRE FOR EMERGENCY MODE BYPASS IF SWITCHED (TYPICAL). "WE" DENOTES FIXTURE TYPE; NUMERAL DENOTES CIRCUIT NUMBER. "c" SUBSCRIPT DENOTES SWITCH CONTROL WHERE SHOWN
- A 1,a — 1' X 4' PENDANT OR SURFACE MOUNTED LED FIXTURE "A" DENOTES FIXTURE TYPE; NUMERAL DENOTES CIRCUIT NUMBER. "a" SUBSCRIPT DENOTES SWITCH CONTROL WHERE SHOWN
- AE 1,a — 1' X 4' PENDANT OR SURFACE MOUNTED EMERGENCY LED FIXTURE WITH EMERGENCY BATTERY BACKUP BALLAST. PROVIDE THIRD WIRE FOR EMERGENCY MODE BYPASS IF SWITCHED (TYPICAL). "AE" DENOTES FIXTURE TYPE; NUMERAL DENOTES CIRCUIT NUMBER. "a" SUBSCRIPT DENOTES SWITCH CONTROL WHERE SHOWN
- 5 — EXIT SIGN CEILING OR PENDANT MOUNTED. ARROWS DENOTE DIRECTION OF EGRESS. NUMERAL DENOTES CIRCUIT NUMBER. SHADED CHEVRONS DENOTE EXIT FACES.
- 5 — WALL MOUNTED EXIT SIGN. ARROWS DENOTE DIRECTION OF EGRESS. NUMERAL DENOTES CIRCUIT NUMBER. SHADED CHEVRONS DENOTE EXIT FACES.

LIGHTING CONTROL SWITCHES.
(MOUNT 4'-0" AFF UNLESS NOTED OTHERWISE.)

- S_a — SINGLE POLE SWITCH, "a" SUBSCRIPT DENOTES CIRCUITS CONTROLLED.
- S_a^3 — 3-WAY SWITCH, "a" SUBSCRIPT DENOTES CIRCUITS CONTROLLED.
- S_a^{LV} — WALL MOUNTED DIGITAL WALL CONTROL WITH ON/OFF BUTTONS FOR EACH SWITCH LEG, "a" SUBSCRIPT DENOTES CIRCUIT CONTROLLED. PROVIDE WATTSTOPPER #LMSW SERIES OR PPROVED EQUAL
- PC — PHOTOCELL
- LCP — LIGHTING CONTROL PANEL

POWER LEGEND

- DISTRIBUTION PANEL
- PANELBOARD-SURFACE MOUNTED
- PANELBOARD-FLUSH MOUNTED
- T — DRY TYPE TRANSFORMER
- GB — GROUND BUS WALL MOUNTED CHATSWORTH MODEL NO. 10622-020 EXTEND A 1/2"C, 1-#6 INSULATED GROUND TO THE BUILDING GROUND SYSTEM
- NON-FUSED SAFETY SWITCH - RATING AND TYPE AS NOTED ON THE DRAWING.
- 30AS 20AF — FUSIBLE SAFETY SWITCH - RATING AND TYPE AS NOTED ON THE DRAWING. (30 AMP SWITCH, 20 AMP FUSE, 3 POLE)
- MAGNETIC STARTER OR CONTACTOR - RATING AND SIZE AS NOTED ON THE DRAWING.
- CB 100A 70A — ENCLOSED CIRCUIT BREAKER - SIZE AS INDICATED (100 AMP FRAME, 70 AMP TRIP, 3 POLE).
- F L — REDUCED VOLTAGE STARTER
- 1 — MOTOR, NUMERAL DENOTES HORSE POWER
- T — WALL MOUNTED LINE VOLTAGE THERMOSTAT MOUNTED 54"AFF. THERMOSTAT FURNISHED BY HVAC AND INSTALLED BY ELECTRICAL CONTRACTOR.
- EWH — ELECTRIC WATER HEATER
- PB — PULL BOX
- ATC — AUTOMATIC TEMPERATURE CONTROL PANEL
- J — FLUSH WALL MOUNTED JUNCTION BOX WITH BLANK COVERPLATE, SIZE AS REQUIRED BY N.E.C.
- CLG J — CEILING MOUNTED JUNCTION BOX WITH BLANK COVERPLATE, SIZE AS REQUIRED BY N.E.C.
- PB — PULL BOX. TYPE AS NOTED ON THE DRAWINGS OR AS REQUIRED BY N.E.C.
- THREE FUNCTION PUSHBUTTON SWITCH (UP/DOWN/STOP)
- E — EMERGENCY PUSHBUTTON STATION
- CP — PACKAGE CONTROL PANEL FOR EQUIPMENT
- D — MOTORIZED DAMPER
- VFD — VARIABLE SPEED DRIVE
- G KW — EMERGENCY GENERATOR
- ATS — AUTOMATIC TRANSFER SWITCH
- M — WATTHOUR METER
- S_{MS} — THERMAL MOTOR SWITCH

Project:

TOWN OF BLACKSTONE, MASSACHUSETTS DEPARTMENT OF PUBLIC WORKS

BLCKSTONE WATER TREAMENT PLAN

53 ELM STREET, BLACKSTONE, MASSACHUSETTS, 01504

Weston & Sampson

Weston & Sampson Engineers, Inc.
55 Walkers Brook Drive, Suite 100
Reading, MA 01867
978.532.1900 800.SAMPSON

www.westonandsampson.com

Consultants:

Revisions:

No.	Date	Description

COA:

"COPYRIGHT ©2021 BY WESTON & SAMPSON
THIS DRAWING HAS BEEN PREPARED FOR THE EXCLUSIVE USE OF THE CLIENT & PROJECT NAME LISTED ON THIS DRAWING ONLY.

REPRODUCTION, RELEASE OF UTILIZATION OF THE DRAWING CONTENT BY OTHER CLIENTS / FIRMS AND ON OTHER PROJECTS IS PROHIBITED BY LAW.

WESTON & SAMPSON RETAINS THE EXCLUSIVE USE OF THE INTELLECTIAL PROPERTY CONTAINED HEREIN.

Seal:

COMMONWEALTH OF MASSACHUSETTS — ROBERT F. McALEER — ELECTRICAL — No. 48017 — REGISTERED PROFESSIONAL ENGINEER

Issued For:

BID DOCUMENTS

Scale: As indicated

Key Plan:

NORTH

Date:	05/21/2021
Drawn By:	DNM
Reviewed By:	RFM
Approved By:	RFM
W&S Project No.:	ENG20-0740
W&S File No.:	TBD

Drawing Title:

ELECTRICAL TITLE SHEET

Sheet Number:

E001

5/27/2021 12:49:26 PM C:\Users\merchandd\OneDrive - WESTON & SAMPSON ENGINEERS, Inc\Documents\2200740_BlackstoneWTPDesign_Electrical_2020_MarchandD.rvt

GENERAL ELECTRICAL NOTES

1. DRAWINGS ARE DIAGRAMMATIC ONLY. THE EXACT LOCATION, MOUNTING HEIGHTS, SIZE OF EQUIPMENT AND ROUTING OF RACEWAYS SHALL BE COORDINATED AND DETERMINED IN THE FIELD.
2. THE EXACT LOCATION AND MOUNTING HEIGHTS OF ALL LIGHTING FIXTURES LOCATED IN MECHANICAL/ELECTRICAL EQUIPMENT SPACES SHALL BE COORDINATED IN THE FIELD BY THE ELECTRICAL CONTRACTOR BEFORE INSTALLATION OF SAME, SO AS TO AVOID INTERFERENCE WITH DUCTS, PIPING AND OTHER MECHANICAL/ELECTRICAL EQUIPMENT.
3. REFLECTED CEILING PLANS FOR ANY AND ALL AREAS PREPARED BY THE ARCHITECT SHOWING THE LOCATION OF LIGHTING FIXTURES SHALL TAKE PRECEDENCE OVER THE LOCATIONS OF SAME SHOWN ON THE LIGHTING DRAWINGS. THE ELECTRICAL CONTRACTOR SHALL INSTALL THE LIGHTING FIXTURES IN ANY GIVEN AREA TO AGREE WITH THE ARCHITECT'S REFLECTED CEILING PLANS.
4. ALL STRAIGHT FEEDER, BRANCH CIRCUIT AND AUXILIARY SYSTEM CONDUIT RUNS SHALL BE PROVIDED WITH SUFFICIENT PULL BOXES TO LIMIT THE MAXIMUM LENGTH OF ANY SINGLE CABLE PULL TO 150 FEET. EXACT SIZES OF PULL BOXES AND LOCATIONS TO BE DETERMINED IN THE FIELD BY THE ELECTRICAL CONTRACTOR.
5. FURNISH ALL REQUIRED ACCESS PANELS AS REQUIRED TO SUIT FIELD CONDITIONS FOR THE PROPER OPERATION AND MAINTENANCE OF THE ELECTRICAL SYSTEM. THE EXACT SIZES AND PHYSICAL LOCATIONS SHALL BE TO SUIT ACCESSIBILITY AND CONSTRUCTION CONDITIONS. ALL ACCESS PANELS PROVIDED BY THE ELECTRICAL CONTRACTOR SHALL MATCH EXACTLY THE ACCESS PANELS FURNISHED AND INSTALLED BY THE GENERAL CONTRACTOR. THE ACCESS PANELS WILL BE INSTALLED BY THE TRADE CONTRACTOR UNDER THE APPROPRIATE SECTION OF THE SPECIFICATIONS FOR THE SURFACE IN WHICH THE PANELS ARE LOCATED.
6. THE ELECTRICAL CONTRACTOR SHALL COORDINATE WITH THE HVAC, PLUMBING, AND GENERAL CONTRACTORS AS APPLICABLE AS TO THE EXACT LOCATION OF THEIR RESPECTIVE EQUIPMENT; THE POWER WIRING, CONTROL WIRING AND ALL ELECTRICAL CONNECTIONS AND CONDUIT TURN-UPS SHALL BE COORDINATED WITH THE RESPECTIVE CONTRACTORS BEFORE THE START OF CONSTRUCTION IN THE FIELD.
7. SLEEVES ARE TO BE UTILIZED FOR PASSAGE OF CONDUITS THROUGH FLOORS OR WALLS. CONDUITS AND BOXES ARE TO BE SUPPORTED BY THE USE OF PRESET FASTENERS INSTALLED IN FLOORS, WALLS OR COLUMNS. CONDUITS AND BOXES ARE TO BE INSTALLED CONCEALED IN MASONRY WALLS AND ABOVE HUNG CEILINGS. ALL SLEEVES ARE TO BE SEALED WITH APPROVED FIRE STOPPING SEALANT.
8. ALL LIGHTING FIXTURES, ELECTRICAL DEVICES, CABLES AND RACEWAYS ARE TO BE INDEPENDENTLY SUPPORTED OF THE CEILING SYSTEM. FIXTURES ARE TO BE SUPPORTED FROM THE STRUCTURE BY THE USE OF JACK CHAIN, THREADED ROD OR OTHER MEANS APPROVED BY THE ENGINEER. CEILING SYSTEM TIE WIRES AND GRID ARE NOT TO BE UTILIZED FOR THE SUPPORT OF ELECTRICAL DEVICES, CABLES AND RACEWAYS. APPROVED SUPPORTS, HANGERS, CLIPS, ETC. ARE TO BE UTILIZED.
9. THE LOCATION AND MOUNTING HEIGHTS OF ALL POWER, LIGHTING, COMMUNICATIONS AND AUXILIARY SYSTEM DEVICES SHOWN ON THE ARCHITECTURAL DRAWINGS SHALL TAKE PRECEDENCE OVER THE LOCATIONS SHOWN ON THE ELECTRICAL DRAWINGS. THE ELECTRICAL CONTRACTOR SHALL INSTALL ALL POWER, LIGHTING, COMMUNICATIONS AND AUXILIARY SYSTEM DEVICES TO AGREE WITH THE ARCHITECTURAL DRAWINGS.
10. COMBINED HOMERUNS OF TWO (2) OR THREE (3) CIRCUITS MAY BE UTILIZED. HOWEVER, THE NEUTRAL CONDUCTOR IS TO BE INCREASED TO # 10AWG. COMBINED HOMERUNS ARE TO BE LIMITED TO 20A, LIGHTING AND POWER CIRCUITS.
11. INSTALLATION OF BACK TO BACK DEVICES ARE TO BE AVOIDED. ALLOW ONE WALL FRAMING MEMBER BETWEEN EACH BACK TO BACK DEVICE AS A MINIMUM.
12. WORK SHALL CONFORM TO THE MASSACHUSETTS ELECTRICAL CODE, MASSACHUSETTS BUILDING CODE, NFPA AND REQUIREMENTS OF LOCAL AUTHORITIES HAVING JURISDICTION.
13. THE WORD "CONTRACTOR" AS USED IN THE "ELECTRICAL WORK" SHALL MEAN THE ELECTRICAL SUBCONTRACTOR.
14. CONTRACTOR SHALL PAY FOR ALL PERMITS, INSURANCE AND TESTS, AND SHALL PROVIDE LABOR AND MATERIAL TO COMPLETE THE ELECTRICAL WORK SHOWN.
15. CONTRACTOR SHALL PAY ELECTRIC UTILITY COMPANY BACKCHARGES
16. CONTRACTOR SHALL PROVIDE ALL REQUIRED COORDINATION WITH ELECTRIC, TELEPHONE, INTERNET AND CABLE TV UTILITIES. CONTRACTOR TO COORDINATE WITH THE TOWN FOR WORK ORDER NUMBER AND UTILITY CONACTS.
17. EXCEPT AS OTHERWISE NOTED, THE ELECTRICAL WORK SHALL INCLUDE DEMOLITION, PANELBOARDS, CIRCUIT BREAKERS, FEEDERS, WIRING, RACEWAYS, LIGHTING FIXTURES, DEVICES, TELEPHONE AND DATA OUTLETS, SAFETY SWITCHES, FIRE ALARM, TRANSFORMERS AND CONNECTION NECESSARY TO OPERATE MOTORS AND OTHER EQUIPMENT.
18. AUTOMATIC TEMPERATURE CONTROLS SHALL BE PROVIDED AND INSTALLED BY THE MECHANICAL SUBCONTRACTOR. STARTERS, VFD'S AND OTHER CONTROL DEVICES FOR EQUIPMENT SHALL BE FURNISHED BY THE MECHANICAL SUBCONTRACTOR FOR INSTALLATION AND CONNECTION BY THIS CONTRACTOR.
19. THE CONTRACTOR SHALL PROVIDE ALL TEMPORARY LIGHTING AND POWER AND THE GENERAL CONTRACTOR SHALL PAY ALL ENERGY CHARGES FOR TEMPORARY POWER AND LIGHTING.
20. DURING CONSTRUCTION, THE ELECTRICAL CONTRACTOR SHALL KEEP HIS PORTION OF THE WORK NEAT, CLEAN AND ORDERLY.
21. ALL SYSTEMS SHALL BE TESTED FOR SHORT CIRCUIT AND GROUNDS PRIOR TO ENERGIZING AND ANY DEFECTS SHALL BE CORRECTED.
22. ALL CUTTING AND PATCHING REQUIRED FOR ELECTRICAL WORK SHALL BE INCLUDED AS PART OF THIS SECTION.
23. COMPLETE SHOP DRAWINGS SHALL BE SUBMITTED FOR ELECTRICAL EQUIPMENT. WHERE SPECIFIED ELECTRICAL EQUIPMENT IS SUBSTITUTED, THE ELECTRICAL CONTRACTOR SHALL SUBMIT COMPLETE SPECIFICATIONS ON THE SUBSTITUTE AS WELL AS THE ITEM ORIGINALLY SPECIFIED.
24. MATERIALS SHALL BE SPECIFICATION GRADE AND UL LISTED.
25. WHERE MATERIAL IS CALLED OUT IN THE LEGEND BY MANUFACTURER, TYPE OR CATALOG NUMBER, SUCH DESIGNATIONS ARE TO ESTABLISH STANDARDS OR DESIRED QUALITY. ACCEPTANCE OR REJECTIONS OF PROPOSED SUBSTITUTIONS SHALL BE SUBJECT TO THE APPROVAL OF THE OWNER.
26. WORK SHALL BE COORDINATED WITH THAT OF OTHER TRADES TO ELIMINATE INTERFERENCES.
27. ELECTRICAL WORK SHALL BE GUARANTEED FOR A PERIOD OF ONE YEAR FROM DATE OF FINAL COMPLETION.
28. WORK SHALL BE GROUNDED IN ACCORDANCE WITH CODE REQUIREMENTS. COMPLETE EQUIPMENT (INSULATED GREEN WIRE) GROUNDING SYSTEM SHALL BE INSTALLED.
29. WIRE SHALL BE TYPE "THHN-THWN" INSULATED FOR 600 VOLTS, MINIMUM SIZE #12 AWG COPPER UNLESS SPECIFICALLY NOTED OTHERWISE.
30. WIRING METHODS: (MUST BE EDITED ANS COORDINATED WITH SPEC)
    - A. EXTERIOR UNDERGROUND FEEDERS SHALL BE PVC SCHEDULE 80 FOR DIRECT BURIED AND PVC SCHEDULE 40 FOR CONCRETE ENCASED.
    - B. EXTERIOR ABOVE GRADE FEEDERS SHALL BE RGS CONDUIT.
    - C. INTERIOR FEEDERS EXPOSED OR BURIED IN CONCRETE WALLS/SLABS SHALL BE RGS CONDUIT.
    - D. INTERIOR BRANCH CIRCUITS FOR HVAC, PLUMBING AND PROCESS EQUIPMENT SHALL BE RGS.
    - E. LIGHTING FIXTURE CONNECTIONS SHALL BE MC CABLE.
    - F. EQUIPMENT CONNECTIONS SHALL BE LIQUID TIGHT FLEXIBLE METAL CONDUIT.
    - G. FIRE ALARM SYSTEM WIRING RUN EXPOSED OR IN CONCRETE WALLS/SLABS SHALL BE RGS CONDUIT.
    - H. TELEPHONE AND DATA SHALL BE EMPTY RGS W/PULL WIRE.
32. NO CONDUIT OR WIRE SHALL BE RUN IN OR BELOW SLAB WITHOUT ENGINEER APPROVAL OR NOTED OTHERWISE ON THE PLANS.
33. CONNECTORS FOR RIGID CONDUIT SHALL BE MADE WITH THREADED COUPLINGS.
34. CONNECTORS FOR ELECTRIC METALLIC TUBING (EMT) AND FLEXIBLE LIQUID TIGHT CONDUIT SHALL BE STEEL COMPRESSION TYPE WITH INSULATED THROATS OR STEEL SET SCREW TYPE.
35. CONDUIT AND TUBING SHALL BE SUPPORTED ON GALVANIZED WALL BRACKETS. TRAPEZE HANGERS OR PIPE STRAPS SECURED BY MEANS OF TOGGLE BOLTS OR INSERTS IN WOOD CONSTRUCTION.
36. FEEDERS SHALL BE ROUTED TIGHT TO THE UNDERSIDE OF THE BUILDING STRUCTURE. CONDUIT SHALL BE INSTALLED PARALLEL AND PERPENDICULAR TO MAIN BUILDING SUPPORTS.
37. BOXES SHALL BE GALVANIZED STEEL AND SHALL BE SIZED TO ACCOMMODATE THE EQUIPMENT OR APPARATUS TO BE INSTALLED. WHERE BOXES OF A STANDARD MAKE ARE NOT AVAILABLE, SPECIAL BOXES SHALL BE MANUFACTURED. FIXTURES SUPPORTED ON THE CEILING OR ON THE WALL SHALL HAVE SUITABLE FIXTURE SUPPORT FOR THE SPECIFIC FIXTURE.
38. PANELBOARDS SHALL BE DEAD FRONT, THERMAL MAGNETIC BOLT-ON CIRCUIT BREAKER TYPE, DESIGNED FOR SURFACE OR FLUSH MOUNTING AS INDICATED ON PLAN, AND HAVING CONNECTIONS TO 120/208 OR 277/480 VOLT, 3 PHASE, 4 WIRE SERVICE. ALL BUS BARS SHALL BE COPPER. CABINETS SHALL BE MADE OF CODE GAUGE GALVANIZED SHEET STEEL, WITH A MINIMUM OF 4 INCH GUTTERS, DOOR IN DOOR CONSTRUCTION, LOCKED DOOR, AND FLUSH HINGES. TYPEWRITTEN INDEX SHALL BE MOUNTED ON DOOR INSIDE TRANSPARENT COVER INDICATING LOAD SERVED. PANELS SHALL INCLUDE SEPARATE EQUIPMENT GROUND BUS.
39. PANELBOARDS, DISCONNECT SWITCHES, AND CONTROLLERS SHALL HAVE NAMEPLATES OF BLACK LAMINATED PLASTIC WITH ENGRAVED WHITE LETTERS, SECURED WITH SELF-TAPPING SCREWS.
40. CONNECTIONS AT MOTORS SHALL BE MADE WITH 18" LENGTH OF 1/2 INCH FLEXIBLE LIQUID TIGHT CONDUIT.
41. CONTRACTOR SHALL PHASE BALANCE PANELBOARDS IN THE FIELD. LOAD ON EACH PHASE SHALL BE BALANCED WITHIN 10% OF EACH OTHER.
42. WALL PLATES SHALL BE PROVIDED FOR EACH SWITCH, RECEPTACLE, DATA AND TELEPHONE OUTLET. PROVIDE WALL PLATES WITH STAINLESS STEEL FINISH FOR ALL DEVICES IN FINISHED AREAS. FOR DEVICES IN UNFINISHED AREAS, PROVIDE CAST IRON OR ALLOY OF SUITABLE TYPE TO MATCH OUTLET BOXES SPECIFIED.
43. TOGGLE SWITCHES SHALL BE OF THE SINGLE POLE A.C. QUIET TOGGLE TYPE FOR MOUNTING IN A SINGLE-GANG SPACING. TOGGLE SWITCHES SHALL BE FULLY RATED 20 AMPERES AT 120/277 VOLT.
44. DUPLEX WALL RECEPTACLES SHALL BE 2 POLE, 3 WIRE, GROUNDING TYPE 20 AMPERE, 125 VOLT WITH METAL PLASTER EARS. RECEPTACLES SHALL BE NEMA STANDARD CONFIGURATION 5-20R.
45. FUSED OR UNFUSED SAFETY SWITCHES SHALL BE TOTALLY ENCLOSED, HEAVY DUTY TYPE. SWITCHES SHALL HAVE VOLTAGE, HORSEPOWER AND AMPERE RATING SUITABLE FOR THE APPLICATION. PROVIDE NUMBER OF POLES AS REQUIRED. SWITCHES LOCATED EXTERIOR TO THE BUILDING OR IN DAMP/WET LOCATIONS SHALL BE IN A NEMA 3R ENCLOSURE.
46. FUSES SHALL BE DUAL ELEMENT, TIME DELAY TYPE, AS MANUFACURED BY BUSSMAN, RELIANCE OR APPROVED EQUAL.
47. FURNISH AND INSTALL SLEEVES IN FLOORS, BEAMS, WALLS, ETC. REQUIRED FOR INSTALLING THIS WORK.
48. CONDUIT PASSING THROUGH FIRE RATED WALLS AND FLOORS SHALL BE PROVIDED WITH ALL NECESSARY MATERIALS TO ENSURE THAT THE FIRE RATED INTEGRITY IS MAINTAINED.
49. FEEDER TAPS WILL NOT BE ALLOWED IN PANELBOARD GUTTERS.
50. CONDUIT RUNS AS SHOWN ON THE PLANS ARE DIAGRAMMATIC ONLY; EXACT LOCATION AND METHOD OF SUPPORT SHALL BE DETERMINED IN THE FIELD.
51. CONTRACTOR SHALL CHECK EXISTING CONDITIONS TO DETERMINE EXACT EXTENT OF WORK TO BE PERFORMED PRIOR TO BIDDING. DIMENSIONS RELEVANT TO EXISTING WORK SHALL BE VERIFIED IN THE FIELD.
52. IN AREAS NOT AFFECTED BY THIS RENOVATION, THIS SUBCONTRACTOR SHALL MAINTAIN CONTINUITY OF ELECTRIC SERVICE.
53. WHERE CONNECTIONS ARE MADE IN EXISTING PANELS, THE PANEL INDEX SHALL BE REVISED TO INDICATE THE NEW LOADS SERVED. NEW CIRCUIT BREAKERS ADDED TO EXISTING PANELS SHALL BE THE SAME FRAME SIZE, VOLTAGE RATING AND INTERRUPTING CAPACITY AS EXISTING PANEL AND CIRCUIT BREAKERS.
54. THE CONTRACTOR SHALL PROVIDE ALL REQUIRED POWER SUPPLIES, APPURTENANCES, FINAL CONNECTIONS, TESTING AND WORK REQUIRED FOR ADDITIONS TO THE EXISTING FIRE ALARM SYSTEM. PAY ALL COSTS ARISING THERE FROM, FOR A COMPLETE AND OPERATIONAL SYSTEM.
55. ELECTRICAL SHUTDOWN SHALL BE AT A TIME AND DATE APPROVED BY THE OWNER.
56. PROVIDE AS-BUILT "CADD" DRAWINGS AT THE COMPLETION OF THE PROJECT.
57. ALL RECEPTACLES LOCATED WITHIN THE MAINTENANCE BAY'S AND GARAGE AREAS SHALL BE GFI TYPE OUTLETS.
58. ELECTRICAL CONTRACTOR SHALL LABEL ALL ELECTRICAL DEVICES INCLUDING BUT NOT LIMITED TO RECEPTACLES, TEL/DATA OUTLETS, DISCONNECT SWITCHES, PANELBOARDS, THERMAL MOTOR SWITCHES, CONTROL PANELS, JUNCTION BOXES, ETC.
    - A. RECEPTACLES - PANEL NAME AND CIRCUIT DESIGNATION
    - B. TEL/DATA OUTLETS - NUMBER OF DATA AND TELEPHONE PORTS
    - C. DISCONNECTS - PANEL NAME, CIRCUIT DESIGNATION AND EQUIPMENT SERVING.
    - D. THERMAL MOTOR SWITCHES - PANEL NAME, CIRCUIT DESIGNATION AND EQUIPMENT SERVING.
    - E. ENCLOSED CIRCUIT BREAKERS - PANEL NAME, CIRCUIT DESIGNATION AND EQUIPMENT SERVING.
    - F. PANELBOARDS - PANEL NAME, VOLTAGE, AMPERAGE, PHASE AS WELL AS PANEL AND CIRCUIT IT IS FED FROM.
    - G. CONTROL PANEL - PANEL NAME AND CIRCUIT DESIGNATION
    - H. JUNCTION BOXES - PANEL NAME AND CIRCUIT DESIGNATION
59. ADDRESS QUESTIONS TO THE ENGINEER IN WRITING BEFORE AWARD OF CONTRACT, OTHERWISE ENGINEER INTERPERTATION OF MEANING AND INTENT OF DRAWINGS SHALL BE FINAL.

5/27/2021 12:49:26 PM C:\Users\rmarchand\OneDrive - WESTON & SAMPSON ENGINEERS, Inc\Documents\200740_BlackstoneWTPDesign_Electrical_2020_MarchandD.rvt

Project:

TOWN OF BLACKSTONE,
MASSACHUSETTS DEPARTMENT OF PUBLIC WORKS

BLCKSTONE WATER TREAMENT PLAN

53 ELM STREET, BLACKSTONE, MASSACHUSETTS, 01504

Weston & Sampson Engineers, Inc.
55 Walkers Brook Drive, Suite 100
Reading, MA 01867
978.532.1900 800.SAMPSON

www.westonandsampson.com

Consultants:

Revisions:

No.	Date	Description

COA:

"COPYRIGHT ©2021 BY WESTON & SAMPSON
THIS DRAWING HAS BEEN PREPARED FOR THE EXCLUSIVE USE OF THE CLIENT & PROJECT NAME LISTED ON THIS DRAWING ONLY.

REPRODUCTION, RELEASE OF UTILIZATION OF THE DRAWING CONTENT BY OTHER CLIENTS / FIRMS AND ON OTHER PROJECTS IS PROHIBITED BY LAW.

WESTON & SAMPSON RETAINS THE EXCLUSIVE USE OF THE INTELLECTIAL PROPERTY CONTAINED HEREIN.

Seal:

COMMONWEALTH OF MASSACHUSETTS
ROBERT F. McALEER
ELECTRICAL
No. 48017
REGISTERED
PROFESSIONAL ENGINEER

Issued For:

BID DOCUMENTS

Scale: N.T.S.

Key Plan:

NORTH

Date:	05/21/2021
Drawn By:	DNM
Reviewed By:	RFM
Approved By:	RFM
W&S Project No.:	ENG20-0740
W&S File No.:	TBD

Drawing Title:

ELECTRICAL GENERAL NOTES

Sheet Number:

E002

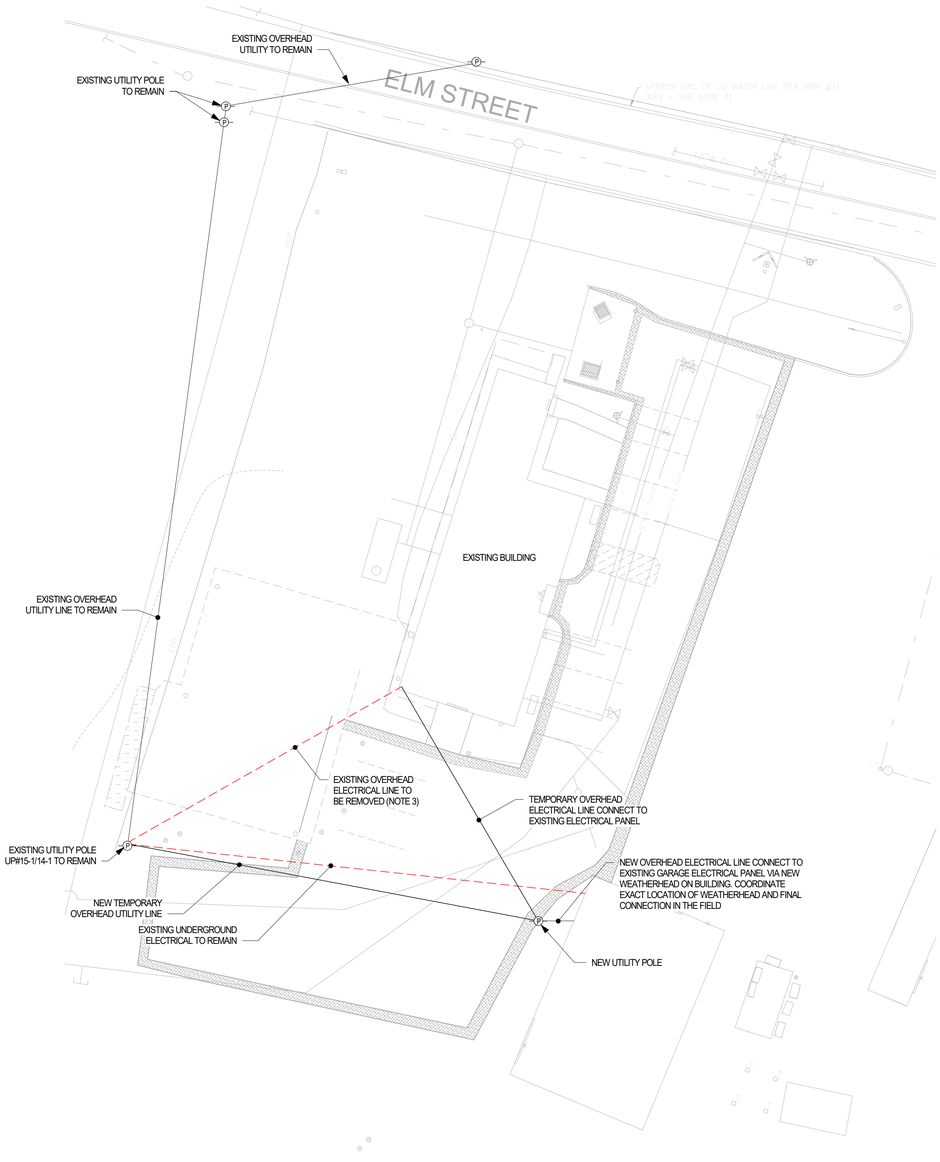

1 Site-Electrical Demo/Temp Plan
1" = 20'-0"

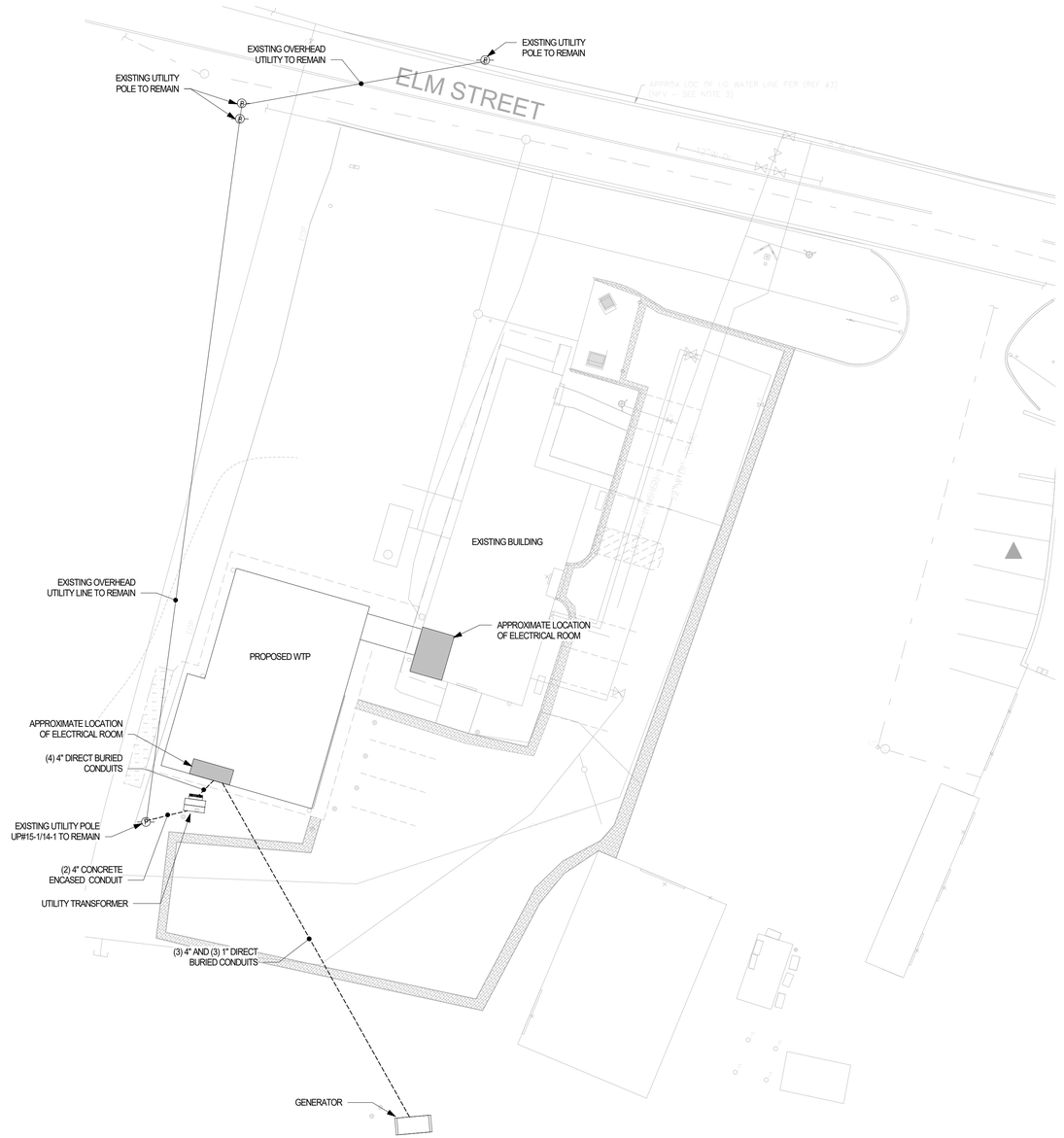

2 Site-Electrical New Work Plan
1" = 20'-0"

DRAWING NOTES:

1. REFER TO DRAWING E001 FOR LEGEND AND ABBREVIATIONS.
2. REFER TO DRAWING E002 FOR GENERAL NOTES.
3. ELECTRICAL CONTRACTOR SHALL RELOCATE THE EXISTING OVERHEAD UTILITY LINES FEEDING THE EXISTING CORROSION CONTROL FACILITY. ELECTRICAL CONTRACTOR TO PROVIDE A TEMPORARY SERVICE WHILE THE NEW WATER TREATMENT PLANT IS BEING INSTALLED. ONCE THE NEW SERVICE TO THE WATER TREATMENT FACILITY HAS BEEN INSTALLED, TESTED AND OPERATIONAL ELECTRICAL CONTRACTOR SHALL REFEED THE EXISTING CORROSION CONTROL FACILITY FROM THE NEW WATER TREATMENT PLANT. ONCE THE NEW PERMANENT POWER IS INSTALLED, TESTED AND OPERATION ELECTRICAL CONTRACTOR SHALL DISCONNECT AND REMOVE THE TEMPORARY ELECTRICAL SERVICE. ELECTRICAL CONTRACTOR SHALL COORDINATE ALL TEMPORARY UTILITY WORK WITH THE UTILITY. ELECTRICAL CONTRACTOR SHALL COORDINATE ALL SHUTDOWNS WITH THE OWNER.

20 10 0 20 40
SCALE: 1"=20'

Project:
TOWN OF BLACKSTONE, MASSACHUSETTS DEPARTMENT OF PUBLIC WORKS

BLCKSTONE WATER TREAMENT PLAN

53 ELM STREET, BLACKSTONE, MASSACHUSETTS, 01504

Weston & Sampson
Weston & Sampson Engineers, Inc.
55 Walkers Brook Drive, Suite 100
Reading, MA 01867
978.532.1900 800.SAMPSON
www.westonandsampson.com

Consultants:

Revisions:

No.	Date	Description

COA:
"COPYRIGHT ©2021 BY WESTON & SAMPSON
THIS DRAWING HAS BEEN PREPARED FOR THE EXCLUSIVE USE OF THE CLIENT & PROJECT NAME LISTED ON THIS DRAWING ONLY.
REPRODUCTION, RELEASE OF UTILIZATION OF THE DRAWING CONTENT BY OTHER CLIENTS / FIRMS AND ON OTHER PROJECTS IS PROHIBITED BY LAW.
WESTON & SAMPSON RETAINS THE EXCLUSIVE USE OF THE INTELLECTIAL PROPERTY CONTAINED HEREIN.

Seal:
COMMONWEALTH OF MASSACHUSETTS
ROBERT F. McALEER ELECTRICAL No. 48017
PROFESSIONAL ENGINEER

Issued For:
BID DOCUMENTS

Scale: As indicated

Key Plan:

NORTH

Date:	05/21/2021
Drawn By:	DNM
Reviewed By:	RFM
Approved By:	RFM
W&S Project No.:	ENG20-0740
W&S File No.:	TBD

Drawing Title:
ELECTRICAL SITE PLANS

Sheet Number:
E003

5/27/2021 12:49:26 PM C:\Users\merchandf\OneDrive - WESTON & SAMPSON ENGINEERS, Inc\Documents\2200740_BlacktoneWTPDesign_Electrical_2020_MarchandD.rvt

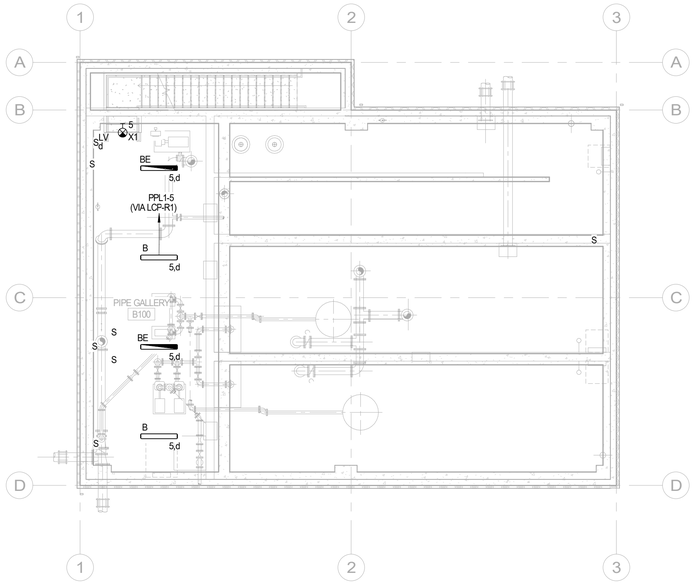

1 Overall - Lighting Plan - B
1/8" = 1'-0"

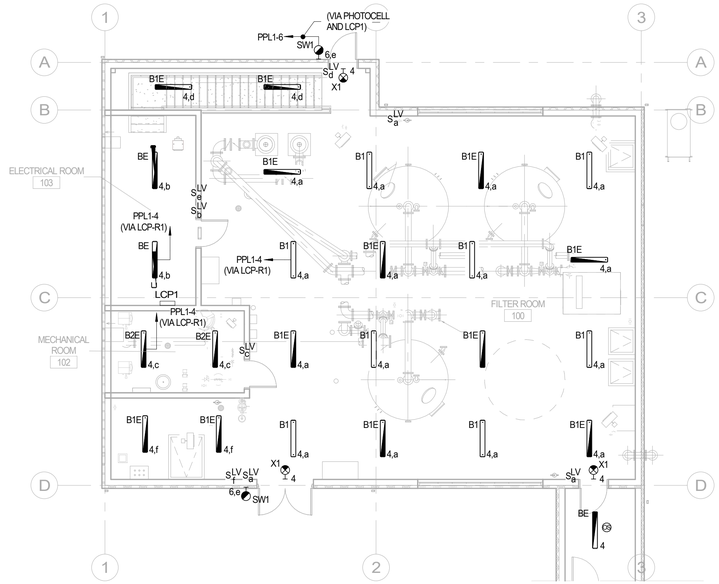

2 Overall Lighting Plan-01
1/8" = 1'-0"

LIGHT FIXTURE MOUNTING HIEGHT	
FILTER ROOM	16' - 0" AFF
ELECTRICAL ROOM	SURFACE MOUNTED
MECHANICAL ROOM	18' - 0" AFF
OUTSIDE	8' - 6" AFG
BUILDING CONNECTOR	SURFACE MOUNTED
PIPE GALLERY	SURFACE MOUNTED

DRAWING NOTES:

1. REFER TO DRAWING E001 FOR LEGEND, ABBREVIATIONS AND AREA NEMA CLASSIFICATIONS.
2. REFER TO DRAWING E002 FOR GENERAL NOTES.
3. REFER TO DRAWING E602 FOR LIGHTING FIXTURE SCHEDULE AND LIGHTING CONTROL PANEL SCHEDULE.

0 4' 8' 16'

Project:

TOWN OF BLACKSTONE,
MASSACHUSETTS DEPARTMENT OF
PUBLIC WORKS

BLCKSTONE WATER TREAMENT PLAN

53 ELM STREET, BLACKSTONE,
MASSACHUSETTS, 01504

Weston & Sampson

Weston & Sampson Engineers, Inc.
55 Walkers Brook Drive, Suite 100
Reading, MA 01867
978.532.1900 800.SAMPSON

www.westonandsampson.com

Consultants:

Revisions:

No.	Date	Description

COA:

"COPYRIGHT ©2021 BY WESTON & SAMPSON
THIS DRAWING HAS BEEN PREPARED FOR THE EXCLUSIVE USE OF THE CLIENT & PROJECT NAME LISTED ON THIS DRAWING ONLY.

REPRODUCTION, RELEASE OF UTILIZATION OF THE DRAWING CONTENT BY OTHER CLIENTS / FIRMS AND ON OTHER PROJECTS IS PROHIBITED BY LAW.

WESTON & SAMPSON RETAINS THE EXCLUSIVE USE OF THE INTELLECTIAL PROPERTY CONTAINED HEREIN.

Seal:

COMMONWEALTH OF MASSACHUSETTS
ROBERT F. McALEER
ELECTRICAL
No. 46017
REGISTERED
PROFESSIONAL ENGINEER

Issued For:

BID DOCUMENTS

Scale: 1/8" = 1'-0"

Key Plan:

NORTH

Date:	05/21/2021
Drawn By:	DNM
Reviewed By:	RFM
Approved By:	RFM
W&S Project No.:	ENG20-0740
W&S File No.:	TBD

Drawing Title:

ELECTRICAL
LIGHTING PLANS

Sheet Number:

E101

5/27/2021 12:49:28 PM C:\Users\rmarchand\OneDrive - WESTON & SAMPSON ENGINEERS, Inc\Documents\200740_BlackstoneWTPDesign_Electrical_2020_MarchandD.rvt

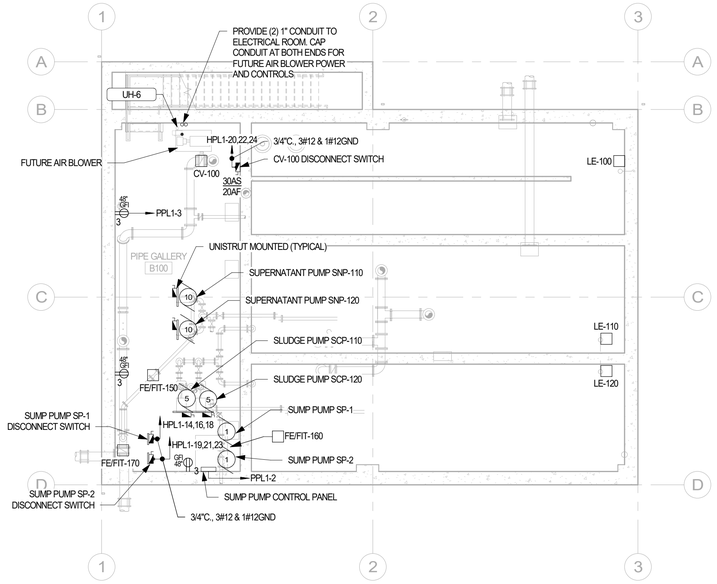

1 Water Treatment Basin Level Power Plan
1/8" = 1'-0"

0 4' 8' 16'

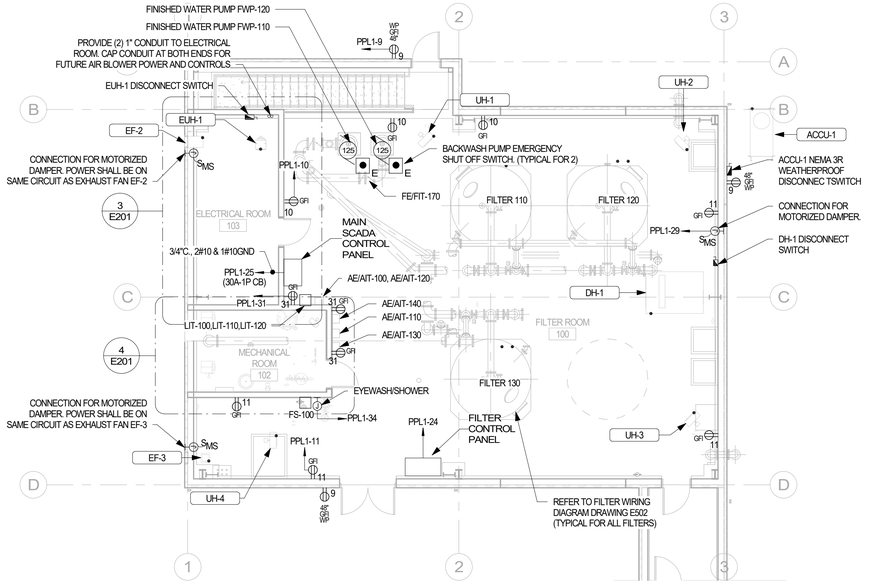

2 Water Treatment Plant First Floor Power Plan
1/8" = 1'-0"

0 4' 8' 16'

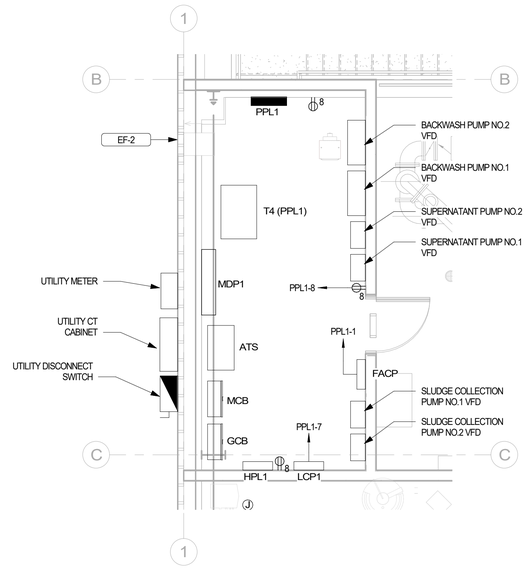

3 ELECTRICAL ROOM ENLARGED PLAN
1/4" = 1'-0"

0 2' 4' 8'

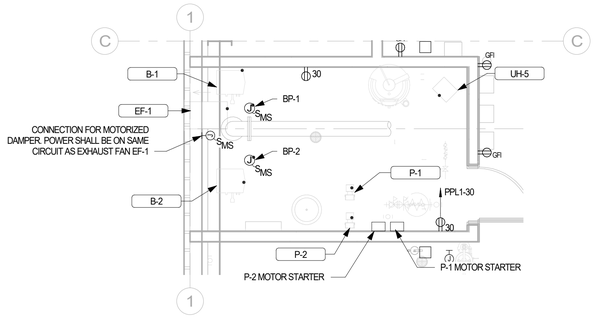

4 MECHANICAL ROOM ENLARGED PLAN
1/4" = 1'-0"

0 2' 4' 8'

DRAWING NOTES:

1. REFER TO DRAWING E001 FOR LEGEND AND ABBREVIATIONS.
2. REFER TO DRAWING E002 FOR GENERAL NOTES.
3. REFER TO DRAWING E602 AND E603 FOR EQUIPMENT SCHEDULES.
4. REFER TO DRAWINGS E603 FOR PANELBOARD SCHEDULES.

Project:

TOWN OF BLACKSTONE, MASSACHUSETTS DEPARTMENT OF PUBLIC WORKS

BLCKSTONE WATER TREAMENT PLAN

53 ELM STREET, BLACKSTONE, MASSACHUSETTS, 01504

Weston & Sampson
Weston & Sampson Engineers, Inc.
55 Walkers Brook Drive, Suite 100
Reading, MA 01867
978.532.1900 800.SAMPSON
www.westonandsampson.com

Consultants:

Revisions:

No.	Date	Description

COA:

"COPYRIGHT ©2021 BY WESTON & SAMPSON
THIS DRAWING HAS BEEN PREPARED FOR THE EXCLUSIVE USE OF THE CLIENT & PROJECT NAME LISTED ON THIS DRAWING ONLY.

REPRODUCTION, RELEASE OF UTILIZATION OF THE DRAWING CONTENT BY OTHER CLIENTS / FIRMS AND ON OTHER PROJECTS IS PROHIBITED BY LAW.

WESTON & SAMPSON RETAINS THE EXCLUSIVE USE OF THE INTELLECTUAL PROPERTY CONTAINED HEREIN.

Seal:

COMMONWEALTH OF MASSACHUSETTS
ROBERT F. McALEER
ELECTRICAL
No. 48017
REGISTERED
PROFESSIONAL ENGINEER

Issued For:

BID DOCUMENTS

Scale: As indicated

Key Plan:

NORTH

Date:	05/21/2021
Drawn By:	DM
Reviewed By:	RFM
Approved By:	RFM
W&S Project No.:	ENG20-0740
W&S File No.:	TBD

Drawing Title:

ELECTRICAL POWER PLANS

Sheet Number:

E201

C:\Users\marchandd\OneDrive - WESTON & SAMPSON ENGINEERS, Inc\Documents\2200740_BlackstoneWTPDesign_Electrical_2020_MarchandD.rvt
6/1/2021 10:47:48 AM

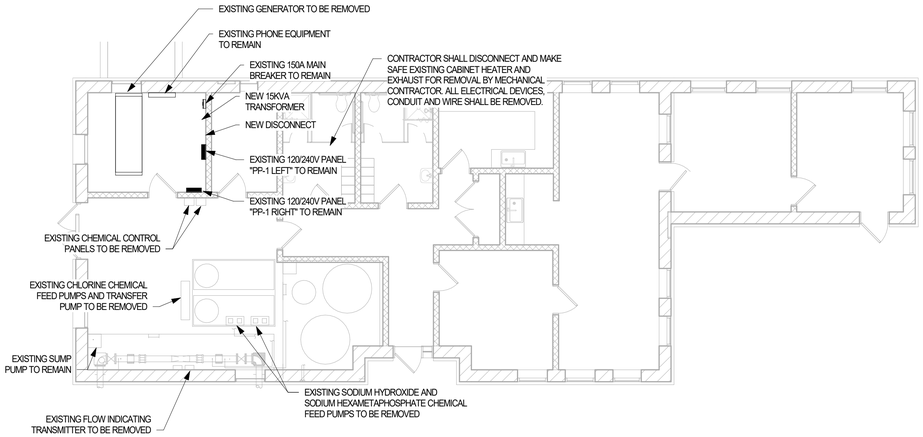

3 Existing Bldg Power Demo Plan
1/8" = 1'-0"

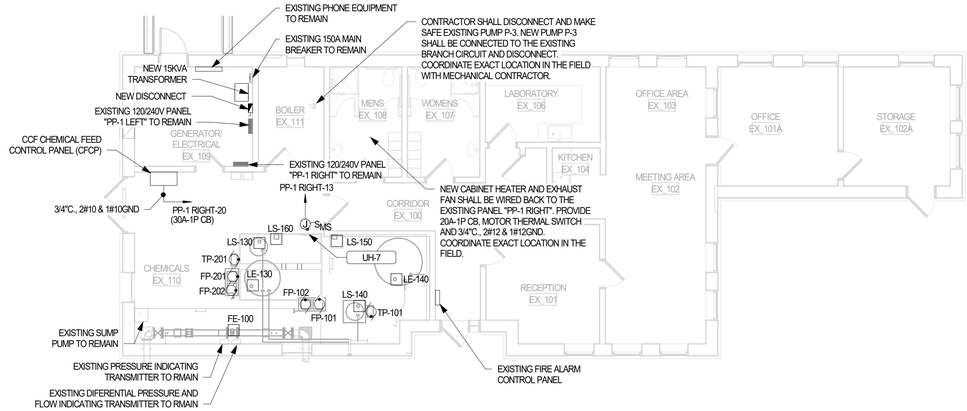

1 Existing Bldg Power New Work Plan
1/8" = 1'-0"

EXISTING CORROSION CONTROL FACILITY ELECTRICAL ROOM PHOTO 1

EXISTING CORROSION CONTROL FACILITY ELECTRICAL PANEL

EXISTING CORROSION CONTROL FACILITY FIRE ALARM PANEL

EXISTING CORROSION CONTROL FACILITY ELECTRICAL ROOM PHOT 2

DRAWING NOTES:

1. REFER TO DRAWING E001 FOR LEGEND AND ABBREVIATIONS.
2. REFER TO DRAWING E002 FOR GENERAL NOTES.
3. REFER TO DRAWING E602 AND E603 FOR EQUIPMENT SCHEDULES.
4. REFER TO DRAWINGS E603 FOR PANELBOARD SCHEDULES.
5. REFER TO DRAWING E502 CHEMICAL FEED PUMP INSTALLATION DETAIL 6 AND CHEMICAL TRANSFER PUMP INSTALLATION DETAIL 7 FOR ADDITIONAL REQUIREMENTS.
6. ALL ELECTRICAL WORK ASSOCIATED WITH THE HVAC EQUIPMENT SHALL BE PART OF ALTERNATE NO.2

0 4' 8' 16'

Project:
TOWN OF BLACKSTONE, MASSACHUSETTS DEPARTMENT OF PUBLIC WORKS

BLCKSTONE WATER TREAMENT PLAN

53 ELM STREET, BLACKSTONE, MASSACHUSETTS, 01504

Weston & Sampson
Weston & Sampson Engineers, Inc.
55 Walkers Brook Drive, Suite 100
Reading, MA 01867
978.532.1900 800.SAMPSON
www.westonandsampson.com

Consultants:

Revisions:

No.	Date	Description

COA:
"COPYRIGHT ©2021 BY WESTON & SAMPSON
THIS DRAWING HAS BEEN PREPARED FOR THE EXCLUSIVE USE OF THE CLIENT & PROJECT NAME LISTED ON THIS DRAWING ONLY.

REPRODUCTION, RELEASE OF UTILIZATION OF THE DRAWING CONTENT BY OTHER CLIENTS / FIRMS AND ON OTHER PROJECTS IS PROHIBITED BY LAW.

WESTON & SAMPSON RETAINS THE EXCLUSIVE USE OF THE INTELLECTUAL PROPERTY CONTAINED HEREIN.

Seal:
COMMONWEALTH OF MASSACHUSETTS
ROBERT F. McALEER ELECTRICAL No. 48017 REGISTERED PROFESSIONAL ENGINEER

Issued For:
BID DOCUMENTS

Scale: 1/8" = 1'-0"

Key Plan:

NORTH

Date:	05/18/21
Drawn By:	DNM
Reviewed By:	RFM
Approved By:	RFM
W&S Project No.:	ENG20-0740
W&S File No.:	TBD

Drawing Title:
EXISTING CORROSION CONTROL FACILITY ELECTRICAL PLANS

Sheet Number:
E202

6/1/2021 10:47:50 AM C:\Users\marchandd\OneDrive - WESTON & SAMPSON ENGINEERS, Inc\Documents\200740_BlackstoneWTPDesign_Electrical_2020_MarchandD.rvt

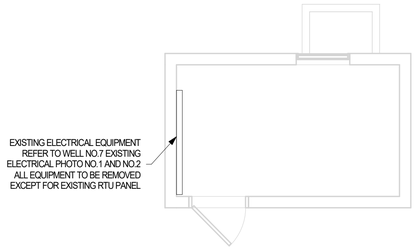

1 WELL NO.7- DEMO PLAN
1/4" = 1'-0"

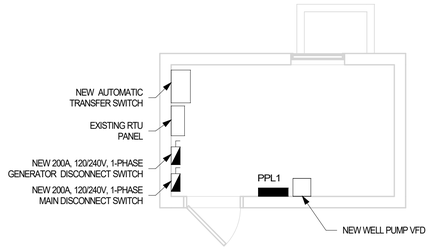

2 WELL NO.7 - NEW WORK PLAN
1/4" = 1'-0"

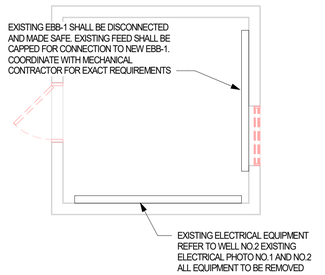

3 WELL NO.2 - DEMO PLAN
1/4" = 1'-0"

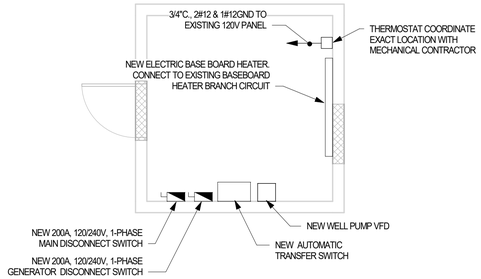

4 WELL NO.2 - NEW WORK
1/4" = 1'-0"

WELL NO.7 EXISTING ELECTRICAL EQUIPMENT PHOTO NO.1

WELL NO.7 EXISTING ELECTRICAL EQUIPMENT PHOTO NO.2

WELL NO.2 EXISTING ELECTRICAL EQUIPMENT PHOTO NO.1

WELL NO.2 EXISTING ELECTRICAL PANEL

WELL NO.2 EXISTING ELECTRICAL EQUIPMENT PHOTO NO.2

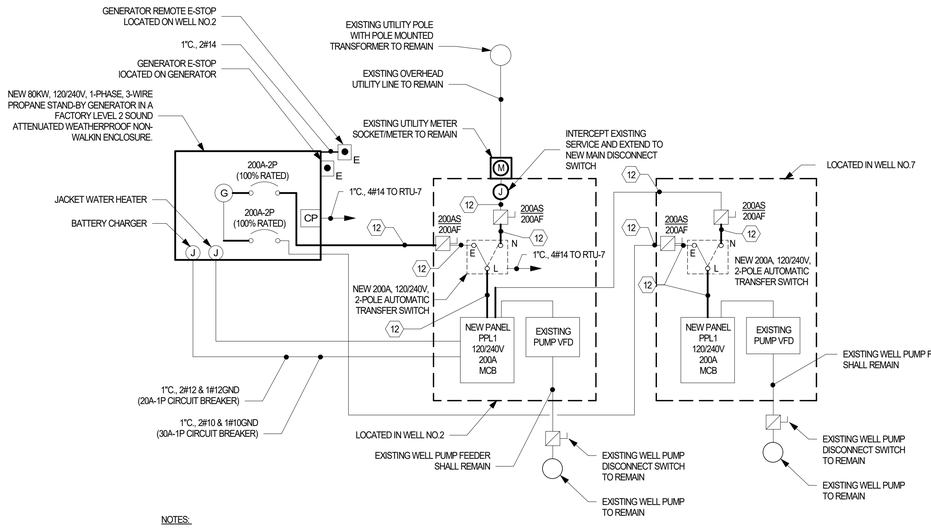

NOTES:

1. CONTRACTOR SHALL DISCONNECT AND REMOVE EXISTING WELL PUMP STARTER AND REPLACE WITH A NEW VFD. EXITING FEED SHALL BE RECONNECTED TO NEW VFD.
2. PROVIDE A 1"C., FROM THE GENERATOR CONTROL PANEL WITH 2#14 TO EACH ATS FOR START CIRCUIT.
3. CONTRACTOR SHALL FIELD VERIFY ALL EXISTING CIRCUITS TO BE RECONNECTED TO THE NEW PANEL.

5 ELECTRICAL WELL NO.2 AND NO.7 ONE-LINE RISER DIAGRAM
NOT TO SCALE

DRAWING NOTES:

1. REFER TO DRAWING E001 FOR LEGEND AND ABBREVIATIONS.
2. REFER TO DRAWING E002 FOR GENERAL NOTES.

0 2' 4' 8'

C:\Users\rmarchand\OneDrive - WESTON & SAMPSON ENGINEERS, Inc\Documents\g2200740_BlackstoneWTPDesign_Electrical_2020_MarchandD.rvt
6/1/2021 10:47:51 AM

Project:

TOWN OF BLACKSTONE,
MASSACHUSETTS DEPARTMENT OF
PUBLIC WORKS

BLCKSTONE WATER TREAMENT PLAN

53 ELM STREET, BLACKSTONE,
MASSACHUSETTS, 01504

Weston & Sampson
Weston & Sampson Engineers, Inc.
55 Walkers Brook Drive, Suite 100
Reading, MA 01867
978.532.1900 800.SAMPSON
www.westonandsampson.com

Consultants:

Revisions:

No.	Date	Description

COA:

©COPYRIGHT ©2021 BY WESTON & SAMPSON
THIS DRAWING HAS BEEN PREPARED FOR THE EXCLUSIVE USE OF THE CLIENT & PROJECT NAME LISTED ON THIS DRAWING ONLY.

REPRODUCTION, RELEASE OF UTILIZATION OF THE DRAWING CONTENT BY OTHER CLIENTS / FIRMS AND ON OTHER PROJECTS IS PROHIBITED BY LAW.

WESTON & SAMPSON RETAINS THE EXCLUSIVE USE OF THE INTELLECTUAL PROPERTY CONTAINED HEREIN.

Seal:

COMMONWEALTH OF MASSACHUSETTS
ROBERT F. McALEER
ELECTRICAL
No. 48017
REGISTERED
PROFESSIONAL ENGINEER

Issued For:

BID DOCUMENTS

Scale: As indicated

Key Plan:

NORTH

Date:	05/21/2021
Drawn By:	DNM
Reviewed By:	RFM
Approved By:	RFM
W&S Project No.:	ENG20-0740
W&S File No.:	TBD

Drawing Title:

ELECTRICAL WELL PLANS SHEET I - ALTERNATE NO.1

Sheet Number:

E401

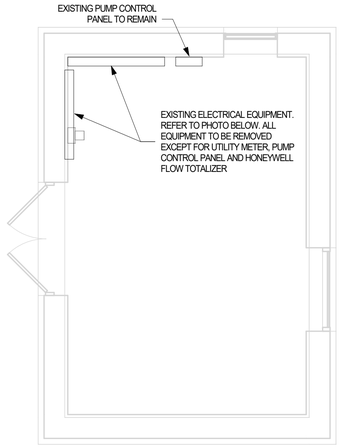

1 WELL NO.4 - DEMO PLAN
1/4" = 1'-0"

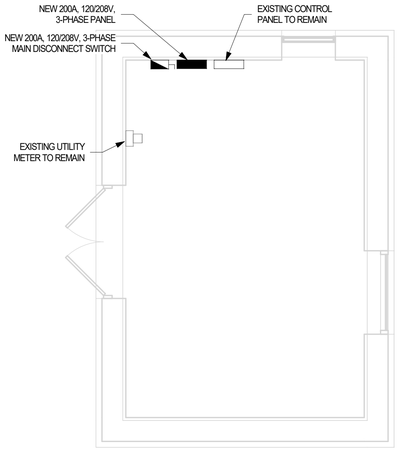

2 WELL NO.4 - NEW WORK
1/4" = 1'-0"

WELL NO.4 EXISTING ELECTRICAL EQUIPMENT PHOTO NO.1

WELL NO.4 EXISTING ELECTRICAL PANEL PHOTO NO.2

PANEL IS EQUIPED WITH THE FOLLOWING EXISTING CIRCUIT BREAKERS:
(1) 225-3P, (1) 50A-3P, (1) 30A-3P, (2) 20A-3P

WELL NO.4 EXISTING ELECTRICAL PANEL PHOTO NO.1

DRAWING NOTES:

1. REFER TO DRAWING E001 FOR LEGEND AND ABBREVIATIONS.
2. REFER TO DRAWING E002 FOR GENERAL NOTES.
3. CONTRACTOR SHALL FIELD VERIFY ALL EXISTING CIRCUITS TO REMAIN AND BE RECONNECTED TO NEW PANEL. REFER TO PHOTOS FOR ALL EXISTING BREAKERS.

0 2' 4' 8'

Project:
TOWN OF BLACKSTONE, MASSACHUSETTS DEPARTMENT OF PUBLIC WORKS

BLCKSTONE WATER TREAMENT PLAN

53 ELM STREET, BLACKSTONE, MASSACHUSETTS, 01504

Weston & Sampson
Weston & Sampson Engineers, Inc.
55 Walkers Brook Drive, Suite 100
Reading, MA 01867
978.532.1900 800.SAMPSON
www.westonandsampson.com

Consultants:

Revisions:

No.	Date	Description

COA:
"COPYRIGHT ©2021 BY WESTON & SAMPSON
THIS DRAWING HAS BEEN PREPARED FOR THE EXCLUSIVE USE OF THE CLIENT & PROJECT NAME LISTED ON THIS DRAWING ONLY.

REPRODUCTION, RELEASE OF UTILIZATION OF THE DRAWING CONTENT BY OTHER CLIENTS / FIRMS AND ON OTHER PROJECTS IS PROHIBITED BY LAW.

WESTON & SAMPSON RETAINS THE EXCLUSIVE USE OF THE INTELLECTUAL PROPERTY CONTAINED HEREIN.

Seal:

Issued For:
BID DOCUMENTS

Scale: 1/4" = 1'-0"

Key Plan:

NORTH

Date:	05/21/2021
Drawn By:	DNM
Reviewed By:	RFM
Approved By:	RFM
W&S Project No.:	ENG20-0740
W&S File No.:	TBD

Drawing Title:
ELECTRICAL WELL PLANS SHEET II - ALTERNATE NO.1

Sheet Number:
E402

6/1/2021 10:47:51 AM C:\Users\marchandd\OneDrive - WESTON & SAMPSON ENGINEERS, Inc\Documents\2200740_Blackstone\YTPDesign_Electrical_2020_MarchandD.rvt

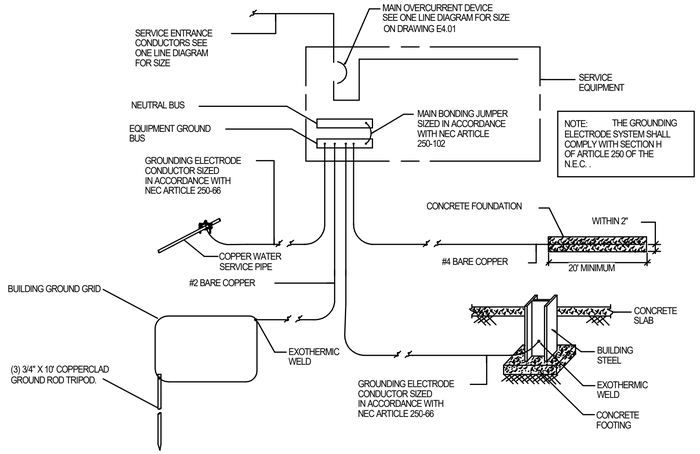

1 SERVICE GROUNDING DETAIL
NOT TO SCALE

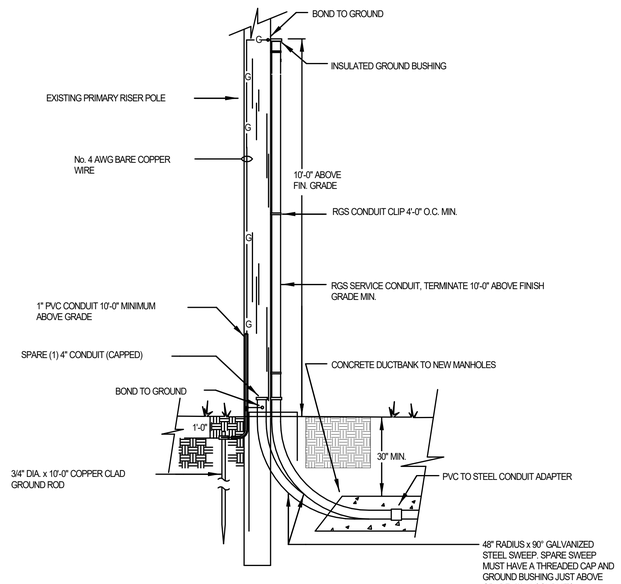

2 TYPICAL RISER POLE DETAIL
NOT TO SCALE

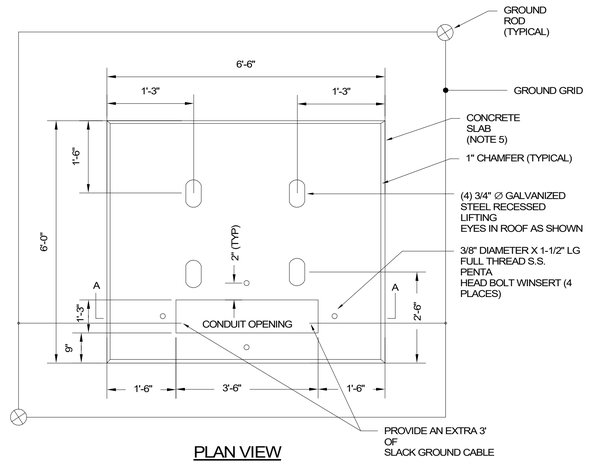

PLAN VIEW
NOT TO SCALE

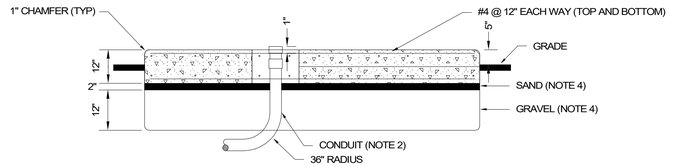

SECTION A-A
NOT TO SCALE

7 PAD MOUNTED TRANSFORMER DETAIL
NOT TO SCALE

PADMOUNT - FOUNDATION NOTES:

1. SCOPE - THIS STANDARD COVERS SPECIFICATIONS FOR THE CONSTRUCTION OF PADMOUNT TRANSFORMER FOUNDATIONS AND GROUNDING FOR EVERSOURCE.
2. CONDUIT BY ELECTRICAL CONTRACTOR - INSTALL AS SHOWN BEFORE SLAB IS POURED. USE 36" RADIUS BENDS, WITH COUPLINGS, NIPPLES AND BUSHINGS AS REQUIRED. (MATERIAL MAY BE GALVANIZED STEEL, BLACK IRON, OR TYPE II FIBER OR PLASTIC.) TERMINATIONS OF CONDUITS SHALL BE LOCATED EXACTLY AS SHOWN, SOLID OR DOTTED, DEPENDING UPON NUMBER OF DUCTS. THE NIPPLE AND BUSHING SHOULD BE INSTALLED AFTER THE TRANSFORMER IS PLACED AND BEFORE THE CABLES ARE PULLED.
3. GROUND GRID BY ELECTRICAL CONTRACTOR -INSTALL #1/0 S.D. 7 STRAND BARE COPPER WIRE LOOP 1'-0" BELOW GRADE. BOND TO ALL EXPOSED METALLIC CONDUIT AND LEAVE 3'-0" OF WIRE ABOVE PAD FOR GROUNDING TRANSFORMER AT TWO OPPOSITE POINTS IN THE CABLE CONDUIT OPENINGS. 3.A. PHOS-COPPER BRAZE CONNECTIONS, CADWELD, OR USE TWO APPROVED CONNECTORS PER JOINT. INSTALL TWO 8 FT. GALVANIZED STEEL (3'4") GROUND RODS WHERE SHOWN. LEAVE GRID EXPOSED UNTIL INSPECTED BY THE UTILITY COMPANY.
4. GRAVEL & SAND BY GENERAL CONTRACTOR -SHALL BE PLACED AS SHOWN IN FIGS. 1 AND 2; THE GRAVEL BEING COMPACTED AND THE SAND THOROUGHLY WETTED JUST BEFORE PLACING THE CONCRETE.
5. CONCRETE SLAB BY GENERAL CONTRACTOR CONCRETE IN ACCORDANCE WITH UTILITY COMPANY REQUIREMENTS. REINFORCE WITH 1/2" RODS LOCATED ON A 12" X 12" GRID AND LOCATED IN THE MIDDLE OF THE SLAB.
6. THE ELECTRICAL CONTRACTOR SHALL COORDINATE WITH THE UTILITY COMPANY FOR ALL INSTALLATION REQUIREMENTS PRIOR TO THE START OF ANY WORK.

EVERSOURCE MINIMUM PAD REQUIREMENTS

1. CONCRETE MINIMUM STRENGTH, 5000 PSI @ 28 DAYS.
2. STEEL REINFORCEMENT - ASTM A615, GRADE 60.
3. MINIMUM STEEL COVER, 1-1/2 INCHES.
4. DESIGN LOADING -- AASHTO HS20-44.
5. DESIGN SPECIFICATIONS -- ACI 318 & AASHTO LOAD FACTOR DESIGN METHOD.
6. REINFORCED TO SUPPORT H-20 WHEEL LOAD.
7. MANUFACTURERS NAME TO BE STENCILED ON VERTICAL WALL OF CUTOUT OPENING.

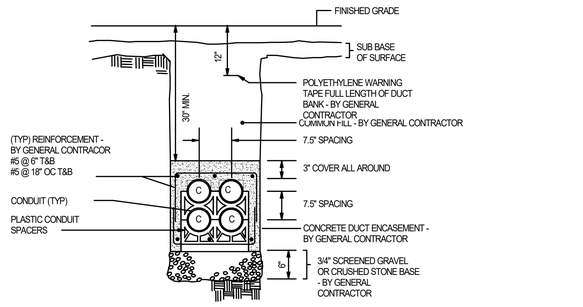

3 TYPICAL CONCRETE ENCASED DUCTBANK NO.1
NOT TO SCALE

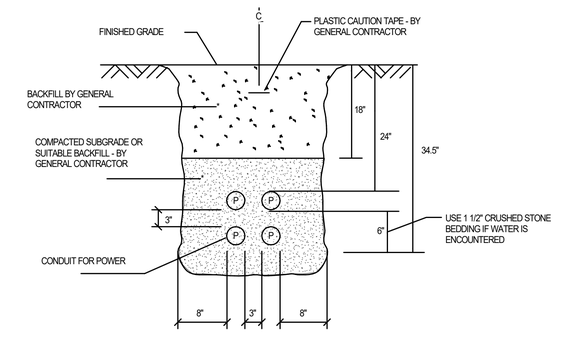

5 TYPICAL DIRECT BURIED DUCTBANK NO.1
NOT TO SCALE

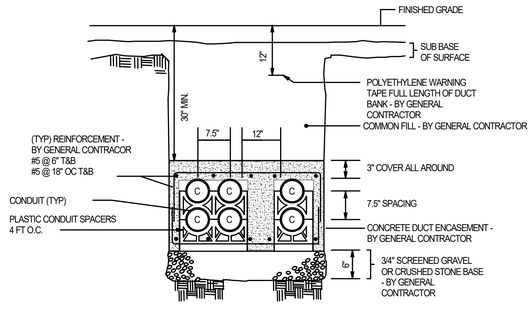

4 TYPICAL CONCRETE ENCASED DUCTBANK NO.2
NOT TO SCALE

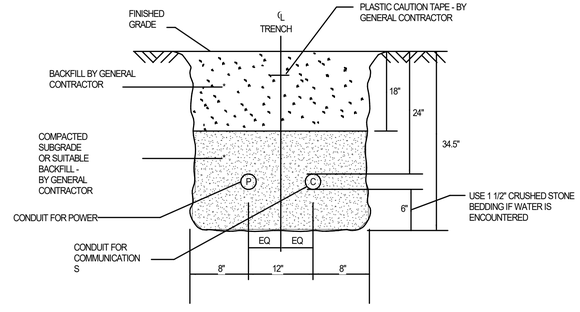

6 TYPICAL DIRECT BURIED DUCTBANK NO.3
NOT TO SCALE

Project:
TOWN OF BLACKSTONE, MASSACHUSETTS DEPARTMENT OF PUBLIC WORKS
BLCKSTONE WATER TREAMENT PLAN
53 ELM STREET, BLACKSTONE, MASSACHUSETTS, 01504

Weston & Sampson
Weston & Sampson Engineers, Inc.
55 Walkers Brook Drive, Suite 100
Reading, MA 01867
978.532.1900 800.SAMPSON
www.westonandsampson.com

Consultants:

Revisions:

No.	Date	Description

COA:
"COPYRIGHT ©2021 BY WESTON & SAMPSON
THIS DRAWING HAS BEEN PREPARED FOR THE EXCLUSIVE USE OF THE CLIENT & PROJECT NAME LISTED ON THIS DRAWING ONLY.
REPRODUCTION, RELEASE OF UTILIZATION OF THE DRAWING CONTENT BY OTHER CLIENTS / FIRMS AND ON OTHER PROJECTS IS PROHIBITED BY LAW.
WESTON & SAMPSON RETAINS THE EXCLUSIVE USE OF THE INTELLECTUAL PROPERTY CONTAINED HEREIN.

Seal:
COMMONWEALTH OF MASSACHUSETTS ROBERT F. McALEER ELECTRICAL No. 48017 REGISTERED PROFESSIONAL ENGINEER

Issued For:
BID DOCUMENTS

Scale: As indicated

Key Plan:

NORTH

Date:	05/21/2021
Drawn By:	DNM
Reviewed By:	RFM
Approved By:	RFM
W&S Project No.:	ENG20-0740
W&S File No.:	TBD

Drawing Title:
ELECTRICAL DETAILS SHEET I

Sheet Number:
E501

C:\Users\marchandd\OneDrive - WESTON & SAMPSON ENGINEERS, Inc\Documents\200740_BlackstoneWTPDesign_Electrical_2020_MarchandD.rvt
5/27/2021 12:49:36 PM

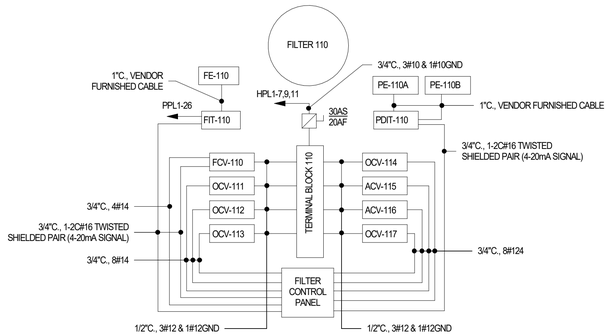

1 FILTER 110 WIRING DIAGRAMS
NOT TO SCALE

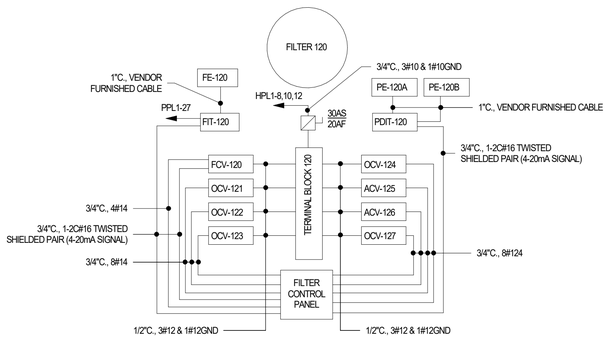

2 FILTER 120 WIRING DIAGRAMS
NOT TO SCALE

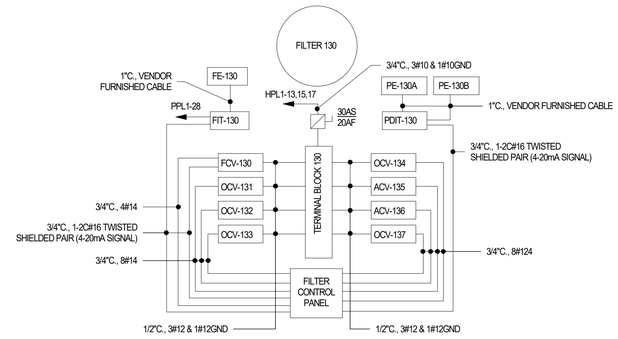

3 FILTER 130 WIRING DIAGRAMS
NOT TO SCALE

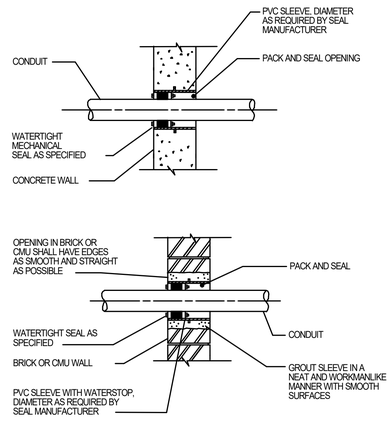

4 WATERTIGHT CONDUIT PENETRATION
NOT TO SCALE

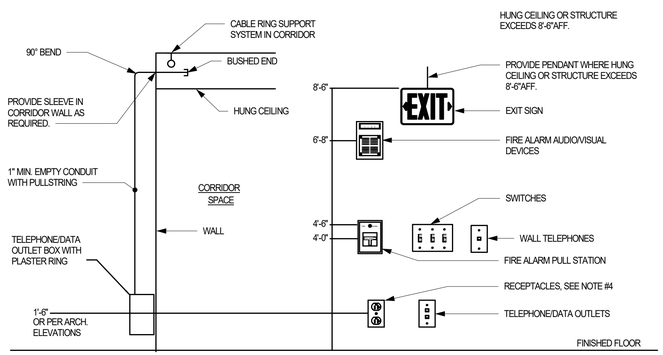

NOTES:
1. ALL MOUNTING HEIGHTS SHALL BE MEASURED FROM FINISHED FLOOR TO CENTERLINE OF DEVICE EXCEPT EXIT SIGNS.
2. DEVICES SHALL BE INSTALLED ON A COMMON VERTICAL CENTERLINE WHEREVER POSSIBLE.
3. ALL DEVICES SHALL BE INSTALLED AT MOUNTING HEIGHTS AS INDICATED ON THIS DETAIL UNLESS OTHERWISE NOTED ON ARCH. ELEVATIONS & DETAILS.
4. ALL RECEPTACLES WITHIN VEHICLE STORAGE AREA 112 SHALL BE MOUNTED AT 42"AFF TO CENTERLINE

5 TYPICAL DEVICE MOUNTING DETAIL
NOT TO SCALE

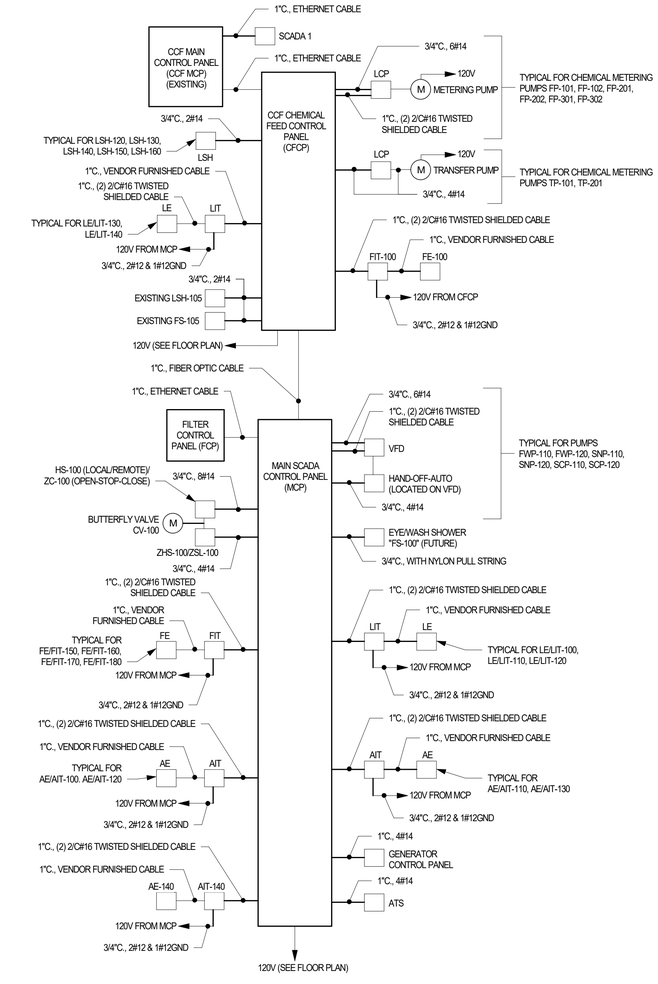

6 INSTRUMENTATION WIRING DIAGRAM
NOT TO SCALE

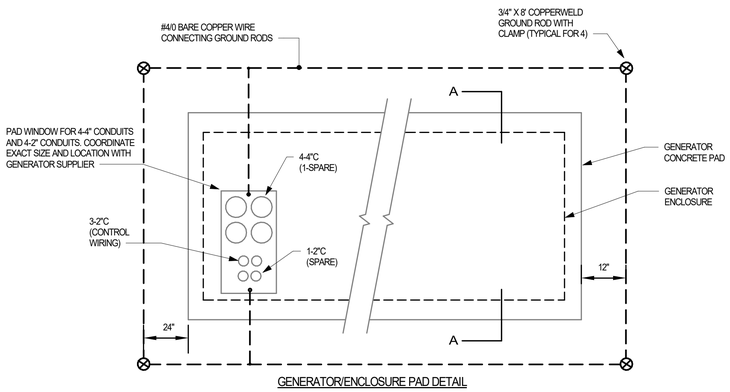

GENERATOR/ENCLOSURE PAD DETAIL

PAD DIMENSIONS SHALL BE PER GENERATOR MANUFACTURER RECOMMENDATIONS

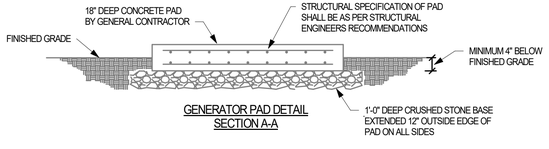

GENERATOR PAD DETAIL
SECTION A-A

7 GENERATOR/ENCLOSURE PAD DETAIL
NOT TO SCALE

Project:

TOWN OF BLACKSTONE, MASSACHUSETTS DEPARTMENT OF PUBLIC WORKS

BLCKSTONE WATER TREAMENT PLAN

53 ELM STREET, BLACKSTONE, MASSACHUSETTS, 01504

Weston & Sampson Engineers, Inc.
55 Walkers Brook Drive, Suite 100
Reading, MA 01867
978.532.1900 800.SAMPSON
www.westonandsampson.com

Consultants:

Revisions:

No.	Date	Description

COA:

©COPYRIGHT ©2021 BY WESTON & SAMPSON
THIS DRAWING HAS BEEN PREPARED FOR THE EXCLUSIVE USE OF THE CLIENT & PROJECT NAME LISTED ON THIS DRAWING ONLY.

REPRODUCTION, RELEASE OF UTILIZATION OF THE DRAWING CONTENT BY OTHER CLIENTS / FIRMS AND ON OTHER PROJECTS IS PROHIBITED BY LAW.

WESTON & SAMPSON RETAINS THE EXCLUSIVE USE OF THE INTELLECTUAL PROPERTY CONTAINED HEREIN.

Seal:

COMMONWEALTH OF MASSACHUSETTS
ROBERT F. McALEER
ELECTRICAL
No. 48017
REGISTERED
PROFESSIONAL ENGINEER

Issued For:

BID DOCUMENTS

Scale: As indicated

Key Plan:

NORTH

Date:	05/21/2021
Drawn By:	DNM
Reviewed By:	RFM
Approved By:	RFM
W&S Project No.:	ENG20-0740
W&S File No.:	TBD

Drawing Title:

ELECTRICAL DETAILS SHEET II

Sheet Number:

E502

C:\Users\marchandd\OneDrive - WESTON & SAMPSON ENGINEERS, Inc\Documents\s2200740_BlackstoneWTPDesign_Electrical_2020_MarchandD.rvt
5/27/2021 1:11:41 PM

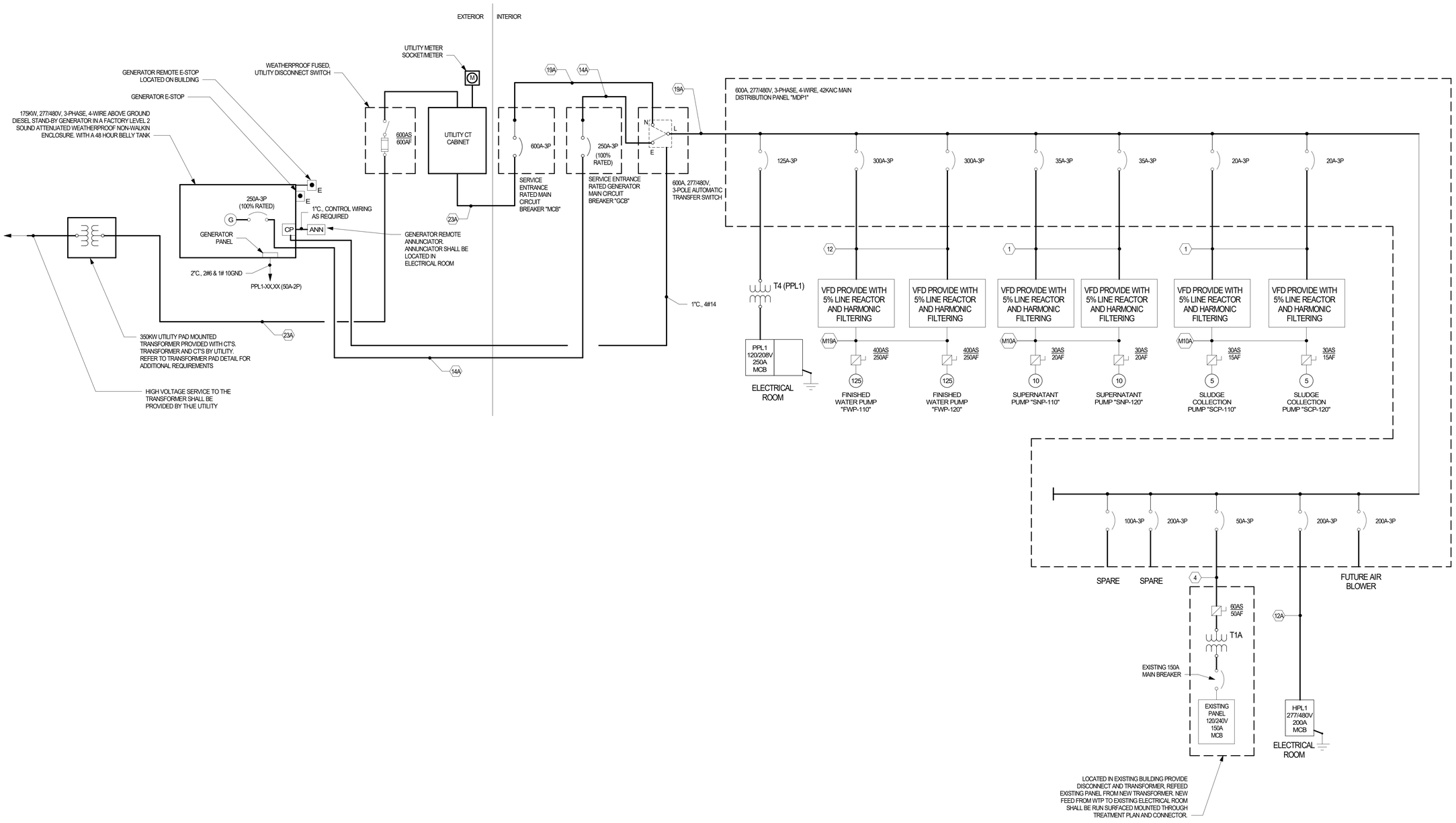

DRAWING NOTES:

1. REFER TO DRAWING E001 FOR LEGEND AND ABBREVIATIONS.
2. REFER TO DRAWING E002 FOR GENERAL NOTES.
3. REFER TO DRAWINGS E603 FOR PANELBOARD SCHEDULES.
4. REFER TO DRAWING E602 FOR FEEDER SCHEDULES.
5. REFER TO SITE PLAN DRAWING E003 FOR ADDITIONAL CONDUITS NOT SHOWN ON THE ONE LINE DIAGRAM.

5/27/2021 12:49:37 PM C:\Users\rmarchandd\OneDrive - WESTON & SAMPSON ENGINEERS, Inc\Documents\2200740_BlackstoneWTPDesign_Electrical_2020_MarchandD.rvt

Project:

TOWN OF BLACKSTONE, MASSACHUSETTS DEPARTMENT OF PUBLIC WORKS

BLCKSTONE WATER TREAMENT PLAN

53 ELM STREET, BLACKSTONE, MASSACHUSETTS, 01504

Weston & Sampson

Weston & Sampson Engineers, Inc.
55 Walkers Brook Drive, Suite 100
Reading, MA 01867
978.532.1900 800.SAMPSON

www.westonandsampson.com

Consultants:

Revisions:

No.	Date	Description

COA:

"COPYRIGHT ©2021 BY WESTON & SAMPSON
THIS DRAWING HAS BEEN PREPARED FOR THE EXCLUSIVE USE OF THE CLIENT & PROJECT NAME LISTED ON THIS DRAWING ONLY.

REPRODUCTION, RELEASE OF UTILIZATION OF THE DRAWING CONTENT BY OTHER CLIENTS / FIRMS AND ON OTHER PROJECTS IS PROHIBITED BY LAW.

WESTON & SAMPSON RETAINS THE EXCLUSIVE USE OF THE INTELLECTIAL PROPERTY CONTAINED HEREIN.

Seal:

COMMONWEALTH OF MASSACHUSETTS
ROBERT F. McALEER
ELECTRICAL
No. 46017
REGISTERED
PROFESSIONAL ENGINEER

Issued For:

BID DOCUMENTS

Scale: N.T.S.

Key Plan:

NORTH

Date: 05/21/2021
Drawn By: DNM
Reviewed By: RFM
Approved By: RFM
W&S Project No.: ENG20-0740
W&S File No.: TBD

Drawing Title:

ELECTRICAL ONE LINE DIAGRAMS

Sheet Number:

E601

	LEGEND OF FEEDER SIZES - COPPER CONDUCTORS				
FEEDER SYMBOL	CONDUCTORS (3 PHASE, 3 WIRE) WITH GROUND	RACEWAY SIZE	CONDUCTORS (3 PHASE, 4 WIRE) WITH GROUND	RACEWAY SIZE	NOMINAL AMPERE RATING
1	3#12 & 1#12 GND.	3/4"			20
1A			4#12 & 1#12 GND.	3/4"	
2	3#10 & 1#10 GND.	3/4"			30
2A			4#10 & 1#10 GND.	3/4"	
3	3#8 & 1#10 GND.	1"			40
3A			4#8 & 1#10 GND.	1"	
4	3#6 & 1#10 GND.	1"			60
4A			4#6 & 1#10 GND.	1"	
5	3#4 & 1#8 GND.	1"			70
5A			4#4 & 1#8 GND.	1-1/4"	
6	3#4 & 1#8 GND.	1"			80
6A			4#4 & 1#8 GND.	1-1/4"	
7	3#3 & 1#8 GND.	1-1/4"			90
7A			4#3 & 1#8 GND.	1-1/4"	
8	3#3 & 1#8 GND.	1-1/4"			100
8A			4#3 & 1#8 GND.	1-1/4"	
9	3#1 & 1#6 GND.	1-1/2"			125
9A			4#1 & 1#6 GND.	1-1/2"	
10	3#1/0 & 1#6 GND.	1-1/2"			150
10A			4#1/0 & 1#6 GND.	2"	
11	3#2/0 & 1#6 GND.	2"			175
11A			4#2/0 & 1#6 GND.	2"	
12	3#3/0 & 1#6 GND.	2"			200
12A			4#3/0 & 1#6 GND.	2"	
13	3#4/0 & 1#4 GND.	2"			225
13A			4#4/0 & 1#4 GND.	2-1/2"	
14	(3)250 kcmil & 1#4 GND.	2-1/2"			250
14A			(4)250 kcmil & 1#4 GND.	3"	
15	(3)350 kcmil & 1#4 GND.	3"			300
15A			(4)350 kcmil & 1#4 GND.	3"	
16	(3)500 kcmil & 1#3 GND.	3"			350
16A			(4)500 kcmil & 1#4 GND.	3-1/2"	
17	(3)600 kcmil & 1#3 GND.	3"			400
17A			(4)600 kcmil & 1#3 GND.	3-1/2"	
18	(6)250 kcmil & 2#2 GND.	(2) 2-1/2"			500
18A			(8)250 kcmil & 2#2 GND.	(2) 3"	
19	(6)350 kcmil & 2#1 GND.	(2) 3"			600
19A			(8)350 kcmil & 2#1 GND.	(2) 3"	
LEGEND OF SERVICE FEEDER SIZES - COPPER CONDUCTORS					
FEEDER SYMBOL	CONDUCTORS (3 PHASE, 3 WIRE) WITH GROUND	RACEWAY SIZE	CONDUCTORS (3 PHASE, 4 WIRE) WITH GROUND	RACEWAY SIZE	NOMINAL AMPERE RATING
21	3-600 kcmil & 1#3 GND.	3"			400
21A			4-600 kcmil & 1#3 GND.	3-1/2"	
22	2 SETS OF (3-250 kcmil & 1#1/0 GND.)	(2) 4"			500
22A			2 SETS OF (4-250 kcmil & 1#1/0 GND.)	(2) 4"	
23	2 SETS OF (3-350 kcmil & 1#2/0 GND.)	(2) 4"			600
23A			2 SETS OF (4-350 kcmil & 1#2/0 GND.)	(2) 4"	
24	2 SETS OF (3-600 kcmil & 1#3/0 GND.)	(2) 4"			800
24A			2 SETS OF (4-600 kcmil & 1#3/0 GND.)	(2) 4"	
25	3 SETS OF (3-400 kcmil & 1#3/0 GND.)	(3) 4"			1000
25A			3 SETS OF (4-400 kcmil & 1#3/0 GND.)	(3) 4"	
26	3 SETS OF (3-600 kcmil & 1#3/0 GND.)	(3) 4"			1200
26A			3 SETS OF (4-600 kcmil & 1#3/0 GND.)	(3) 4"	
27	4 SETS OF (3-600 kcmil & 1#3/0 GND.)	(4) 4"			1600
27A			4 SETS OF (4-600 kcmil & 1#3/0 GND.)	(4) 4"	

LEGEND OF 480V MOTOR FEEDER SIZES - COPPER CONDUCTORS			
FEEDER SYMBOL	CONDUCTORS (3 PHASE, 3 WIRE) WITH GROUND	RACEWAY SIZE	HP RATING
M1	3#12 & 1#12 GND.	3/4"	1/2
M2	3#12 & 1#12 GND.	3/4"	3/4
M3	3#12 & 1#12 GND.	3/4"	1
M4	3#12 & 1#12 GND.	3/4"	1.5
M5	3#12 & 1#12 GND.	3/4"	2
M6	3#12 & 1#12 GND.	3/4"	3
M7	3#12 & 1#12 GND.	3/4"	5
M8	3#12 & 1#12 GND.	3/4"	7.5
M9	3#12 & 1#12 GND.	3/4"	10
M10	3#10 & 1#10 GND.	3/4"	15
M11	3#8 & 1#10 GND.	1"	20
M12	3#6 & 1#8 GND.	1"	25
M13	3#6 & 1#6 GND.	1-1/4"	30
M14	3#6 & 1#6 GND.	1-1/4"	40
M15	3#4 & 1#6 GND.	1-1/2"	50
M16	3#3 & 1#6 GND.	2"	60
M17	3#1 & 1#6 GND.	2"	75
M18	3#2/0 & 1#4 GND.	2"	100
M19	3#3/0 & 1#4 GND.	3"	125

LEGEND OF 480V MOTOR FEEDER SIZES - COPPER CONDUCTORS (VFD RATED CABLE)			
FEEDER SYMBOL	CONDUCTORS (3 PHASE, 3 WIRE) WITH GROUND	RACEWAY SIZE	HP RATING
M1A	3#12 & 1#12 GND.	3/4"	1/2
M2A	3#12 & 1#12 GND.	3/4"	3/4
M3A	3#12 & 1#12 GND.	3/4"	1
M4A	3#12 & 1#12 GND.	3/4"	1.5
M5A	3#12 & 1#12 GND.	3/4"	2
M6A	3#12 & 1#12 GND.	3/4"	3
M7A	3#12 & 1#12 GND.	3/4"	5
M8A	3#12 & 1#12 GND.	3/4"	7.5
M9A	3#12 & 1#12 GND.	3/4"	10
M10A	3#10 & 1#10 GND.	3/4"	15
M11A	3#8 & 1#10 GND.	1"	20
M12A	3#6 & 1#8 GND.	1"	25
M13A	3#6 & 1#6 GND.	1-1/4"	30
M14A	3#6 & 1#6 GND.	1-1/4"	40
M15A	3#4 & 1#6 GND.	1-1/2"	50
M16A	3#3 & 1#6 GND.	2"	60
M17A	3#1 & 1#6 GND.	2"	75
M18A	3#2/0 & 1#4 GND.	2"	100
M19A	3#3/0 & 1#4 GND.	3"	125

DRY TYPE TRANSFORMER SCHEDULE 480-120/208V								
SIZE	KVA	PRIMARY AMPS	SECONDARY AMPS	480 VOLT OVERCURRENT	208 VOLT OVERCURRENT	480V FEEDER CODE	120/208V FEEDER CODE	GROUND SIZE
T0	9	11	25	20A, 3P	30A, 3P	3#12 & 1#12G - 3/4"C.	4#10 & 1#10G - 3/4"C.	#8-3/4"C
T1	15	18	42	30A, 3P	50A, 3P	3#10 & 1#10G - 3/4"C.	4#6 & 1#8G - 1"C.	#8-3/4"C
T2	30	36	83	50A, 3P	100A, 3P	3#10 & 1#10G - 3/4"C.	4#3 & 1#8G - 1 1/4"C.	#8-3/4"C
T3	45	54	125	80A, 3P	150A, 3P	3#4 & 1#8G - 1"C.	4#1/0 & 1#6G - 2"C.	#6-3/4"C
T4	75	90	208	125A, 3P	250A, 3P	3#1 & 1#6G - 1 1/2"C.	4#250 KCMIL & 1#4G - 3"C.	#4-3/4"C
T5	112.5	135	313	175A, 3P	400A, 3P	3#3/0 & 1#6G 2"C.	4#500 KCMIL & 1#1/0G - 4"C.	#1/0-3/4"C

DRY TYPE TRANSFORMER SCHEDULE 480-120/240V								
SIZE	KVA	PRIMARY AMPS	SECONDARY AMPS	480 VOLT OVERCURRENT	240 VOLT OVERCURRENT	480V FEEDER CODE	120/240V FEEDER CODE	GROUND SIZE
T1A	15	18	62.5	30A, 3P	100A, 3P	3#10 & 1#10G - 3/4"C.	2#3 & 1#8G - 1 1/4"C.	#8-3/4"C
T2A	30	36	125	50A, 3P	150A, 3P	3#4 & 1#8G - 1"C.	2#1/0 & 1#6G - 2"C.	#6-3/4"C

LIGHTING CONTROL PANEL "LCP1"					
RELAY	DESCRIPTION	CIRCUIT	VOLTAGE	SWITCH CONTROL	NOTE
R1		PPL1-4	120 V	a	
R2	ELECTRICAL ROOM	PPL1-4	120 V	b	
R3	MECHANICAL ROOM	PPL1-4	120 V	c	
R4	PIPE GALLERY	PPL1-5	120 V	d	
R5	ELECTRICAL ROOM	PPL1-6	120 V	e	
R6	FILTER ROOM	PPL1-4	120 V	f	

LIGHTING FIXTURE SCHEDULE											
TYPE	DESCRIPTION	MANUFACTURER	CATALOG NUMBER	NO. OF LAMPS	LAMP TYPE	LUMENS	COLOR TEMP	MOUNTING	VOLTAGE	LOAD (WATTS)	NOTES
B	1' X 4' ENCLOSED AND GASKETED, VAPORTIGHT PENDANT LED FIXTURE	COOPER LIGHTING	4VT2-LD5-4-DR100-UNV-L835-CD1-WL-GL-U	-	LED	4000	3500K	SURFACE	120	30	
BE	1' X 4' ENCLOSED AND GASKETED, VAPORTIGHT PENDANT LED FIXTURE WITH INTEGRAL EMERGENCY DRIVER	COOPER LIGHTING	4VT2-LD5-4-DR100-UNV-EL10W-L835-CD1-WL-GL-U	-	LED	4000	3500K	SURFACE	120	30	
B1	1' X 4' ENCLOSED AND GASKETED, VAPORTIGHT PENDANT LED FIXTURE	COOPER LIGHTING	4VT2-LD5-6-DR100-UNV-L835-CD1-WL-GL-U/VT2-CHAIN/SET-U	-	LED	6000	3500K	PENDANT	120	51	
B1E	1' X 4' ENCLOSED AND GASKETED, VAPORTIGHT PENDANT LED FIXTURE WITH INTEGRAL EMERGENCY DRIVER	COOPER LIGHTING	4VT2-LD5-6DR100-UNV-EL10W-L835-CD1-WL-GL-U/VT2-CHAIN/SET-U	-	LED	6000	3500K	PENDANT	120	51	
B2	1' X 4' ENCLOSED AND GASKETED, VAPORTIGHT PENDANT LED FIXTURE	COOPER LIGHTING	4VT2-LD5-4-DR100-UNV-L835-CD1-WL-GL-U/VT2-CHAIN/SET-U	-	LED	4000	3500K	PENDANT	120	30	
B2E	1' X 4' ENCLOSED AND GASKETED, VAPORTIGHT PENDANT LED FIXTURE WITH INTEGRAL EMERGENCY DRIVER	COOPER LIGHTING	4VT2-LD5-4-DR100-UNV-EL10W-L835-CD1-WL-GL-U/VT2-CHAIN/SET-U	-	LED	4000	3500K	PENDANT	120	30	
X1	LED EXIT SIGN. MOUNTING, NUMBER OF FACES AND ARROWS AS SHOWN ON FLOOR PLANS	COOPER LIGHTING	LPX7-SD	-	LED	-	-	UNIVERSAL	120	2.4	
SW1	WALL MOUNTED EXTERIOR LED LIGHT FIXTURE	COOPER LIGHTING	GAW-SA1-A-830-U-SL3-BZ-F-OA/RA1016	-	LED	3956	3000K	WALL	120	40	PROVIDE WITH INTEGRAL PHOTOCELL

Project:

TOWN OF BLACKSTONE, MASSACHUSETTS DEPARTMENT OF PUBLIC WORKS

BLCKSTONE WATER TREAMENT PLAN

53 ELM STREET, BLACKSTONE, MASSACHUSETTS, 01504

Weston & Sampson Engineers, Inc.
55 Walkers Brook Drive, Suite 100
Reading, MA 01867
978.532.1900 800.SAMPSON

www.westonandsampson.com

Consultants:

Revisions:

No.	Date	Description

COA:

"COPYRIGHT ©2021 BY WESTON & SAMPSON
THIS DRAWING HAS BEEN PREPARED FOR THE EXCLUSIVE USE OF THE CLIENT & PROJECT NAME LISTED ON THIS DRAWING ONLY.

REPRODUCTION, RELEASE OF UTILIZATION OF THE DRAWING CONTENT BY OTHER CLIENTS / FIRMS AND ON OTHER PROJECTS IS PROHIBITED BY LAW.

WESTON & SAMPSON RETAINS THE EXCLUSIVE USE OF THE INTELLECTUAL PROPERTY CONTAINED HEREIN.

Seal:

COMMONWEALTH OF MASSACHUSETTS
ROBERT F. McALEER
ELECTRICAL
No. 48017
REGISTERED
PROFESSIONAL ENGINEER

Issued For:

BID DOCUMENTS

Scale: As indicated

Key Plan:

NORTH

Date:	05/21/2021
Drawn By:	DNM
Reviewed By:	RFM
Approved By:	RFM
W&S Project No.:	ENG20-0740
W&S File No.:	TBD

Drawing Title:

ELECTRICAL SCHEDULES SHEET I

Sheet Number:

E602

5/27/2021 12:49:39 PM C:\Users\merchandd\OneDrive - WESTON & SAMPSON ENGINEERS, Inc\Documents\2200740_BlackstoneWTPDesign_Electrical_2020_MarchandD.rvt

Panel ID: HPL1
Voltage: 480Y/277
Phase/Wire: 3/4
Fed From: MDP1
Location: ELECTRICAL ROOM 103

MLO Rating: 400 A
A.I.C. Rating: 22,000 AMPS SYMMETRICAL
Manufacturer:

CKT	DESCRIPTION	CB Size	Poles	A		B		C		Poles	CB Size	DESCRIPTION	CKT
1				11.6	1.8								2
3	DEHUMIDIFIER DH-1	60 A	3			11.6	1.8			3	20 A	ACCU-1	4
5								11.6	1.8				6
7				1.1	1.1								8
9	FILTER 110	20 A	3			1.1	1.1			3	20 A	FILTER 120	10
11								1.1	1.1				12
13				1.1	1.5								14
15	FILTER 130	20 A	3			1.1	1.5			3	20 A	SUMP PUMP SP-1	16
17								1.1	1.5				18
19				1.5									20
21	SUMP PUMP SP-2	20 A	3			1.5							22
23								1.5					24
25													26
27													28
29													30
31													32
33													34
35													36
37													38
39													40
41													42
	Total kVA			19.7 kVA		19.7 kVA		19.7 kVA					

Total Connected Load (kVA) 59.1 kVA
Total Connected Current (Amps) 71 A

Panel ID: PPL1
Voltage: 208Y/120
Phase/Wire: 3/4
Fed From:
Location: ELECTRICAL ROOM 103

MCB Rating: 250 A
A.I.C. Rating: 10,000 AMPS SYMMETRICAL
Manufacturer:

CKT	DESCRIPTION	CB Size	Poles	A		B		C		Poles	CB Size	DESCRIPTION	CKT
1	FACP	20 A	1	0.5	1.5					1	20 A	SUMP PUMP CONTROL PANEL	2
3	RCPT PIPE GALLERY B100	20 A	1			0.4	1.4			1	20 A	UPPER LEVEL LIGHTING	4
5	PIPE GALLERY LIGHTING	20 A	1					0.2	0.0	1	20 A	EXTERIOR IIGHTING	6
7	LCP1	20 A	1	0.5	0.5					1	20 A	RCPT ELECTRICAL ROOM 103	8
9	EXTERIOR RECEPTACLES	20 A	1			0.0	0.0			1	20 A	RCPT FILTER ROOM 100	10
11	RCPT FILTER ROOM 100	20 A	1					0.0	1.5	2	20 A	EUH-1 ELECTRICAL ROOM	12
13	UNIT HEATERS	20 A	1	0.0	1.5								14
15	SPEC MECHANICAL ROOM 102	15 A	1			0.6	0.6			1	15 A	BOILER B-2	16
17								0.3	0.3				18
19	HOT WATER PUMP P-1	20 A	3	0.3	0.3					3	20 A	HOT WATER PUMP P-2	20
21						0.3	0.3						22
23	EF-1 AND EF-2	15 A	1					0.0	1.5	1	20 A	FILTER CONTROL PANEL	24
25	MAIN SCADA CONTROL PANEL	30 A	1	0.0	3.3					1	20 A	FILTER 110 FE/FIT	26
27	FILTER 120 FE/FIT	20 A	1			3.3	3.3			1	20 A	FILTER 130 FE/FIT	28
29	MOTORIZED DAMMPER FILTER ROOM	20 A	1					0.1	0.4	1	20 A	RCPT MECHANICAL ROOM 102	30
31					1.3					1	20 A	BP-1	32
33	BP-2	20 A	1			0.6	0.1			1	20 A	EYEWASH/SHOWER	34
35	EXHAUST FAN EF-3	20 A	1					0.0					36
37													38
39													40
41													42
43													44
45													46
47													48
49													50
51													52
53													54
55													56
57													58
59													60
	Total kVA:			9.7 kVA		10.9 kVA		4.3 kVA					

Total Connected Load (kVA) 21.1 kVA
Total Connected Current (Amps) 59 A

HVAC EQUIPMENT SCHEDULE

NO.	DESCRIPTION	LOCATION NAME	LOCATION NUMBER	LOAD HP	LOAD A	LOAD W	VOLT	PHASE	Panel	Circuit Number	CONDUIT & WIRE SIZE	THERMAL MOTOR SWITCH	MOTOR STARTER	VFD	RECEPTACLE	JUNCTION BOX	NON-FUSED DISCONNECT	FUSED DISCONNECT	NOTES
ACCU-1	CONDENSING UNIT			0.00 hp	6 A	0.00 W	480 V	3	HPL1	2,4,6	3/4" 3#12 & 1#12GND								NOTE 3
B-1	BOILER	MECHANICAL ROOM	102	0.00 hp	0 A	500.00 W	120 V	1	PPL1	15	3/4" 2#12 & 1#12GND	X				X			NOTE 3
B-2	BOILER	MECHANICAL ROOM	102	0.00 hp	0 A	500.00 W	120 V	1	PPL1	16	3/4" 2#12 & 1#12GND	X				X			NOTE 3
BP-1	BOILER PUMP	MECHANICAL ROOM	102	0.00 hp	0 A	1200.00 W	120 V	1	PPL1	32	3/4" 2#12 & 1#12GND	X				X			NOTE 3
BP-2	BOILER PUMP	MECHANICAL ROOM	102	0.00 hp	0 A	500.00 W	120 V	1	PPL1	33	3/4" 2#12 & 1#12GND		X			X			NOTE 3
DH-1	DEHUMIDIFIER	FILTER ROOM	100	0.00 hp	42 A	0.00 W	480 V	3	HPL1	1,3,5	1"C., 3#6 & 1#10GND							60AS/60AF	NOTE 3
EF-1	EXHAUST FAN	MECHANICAL ROOM	102	0.00 hp	0 A	0.10 W	120 V	1	PPL1	23	3/4" 2#12 & 1#12GND	X				X			NOTE 3
EF-2	EXHUAST FAN			0.00 hp	0 A	0.01 W	120 V	1	PPL1	23	3/4" 2#12 & 1#12GND	X				X			NOTE 3
EF-3	EXHUAST FAN	FILTER ROOM	100	0.00 hp	0 A	0.01 W	120 V	1	PPL1	35	3/4" 2#12 & 1#12GND	X				X			NOTE 3
EUH-1	ELECTRIC UNIT HEATER	ELECTRICAL ROOM	103	0.00 hp	0 A	3000.00 W	208 V	1	PPL1	12,14	3/4" 2#12 & 1#12GND						20A-1PH		NOTE 3
P-1	HOT WATER PUMP	MECHANICAL ROOM	102	0.00 hp	0 A	900.00 W	208 V	1	PPL1	17,19,21	3/4" 3#12 & 1#12GND		X						NOTE 1
P-2	HOT WATER PUMP	MECHANICAL ROOM	102	0.00 hp	0 A	900.00 W	208 V	1	PPL1	18,20,22	3/4" 3#12 & 1#12GND		X						NOTE 1
UH-1	UNIT HEATER	FILTER ROOM	100	0.00 hp	0 A	0.10 W	120 V	1	PPL1	13	3/4" 2#12 & 1#12GND	X				X			NOTE 3
UH-2	UNIT HEATER	FILTER ROOM	100	0.00 hp	0 A	0.10 W	120 V	1	PPL1	13	3/4" 2#12 & 1#12GND	X				X			NOTE 3
UH-3	UNIT HEATER	FILTER ROOM	100	0.00 hp	0 A	0.10 W	120 V	1	PPL1	13	3/4" 2#12 & 1#12GND	X				X			NOTE 3
UH-4	UNIT HEATER	FILTER ROOM	100	0.00 hp	0 A	0.10 W	120 V	1	PPL1	13	3/4" 2#12 & 1#12GND	X				X			NOTE 3
UH-5	UNIT HEATER	MECHANICAL ROOM	102	0.00 hp	0 A	0.01 W	120 V	1	PPL1	13	3/4" 2#12 & 1#12GND	X				X			NOTE 3
UH-6	UNIT HEATER	PIPE GALLERY	B100	0.00 hp	0 A	0.10 W	120 V	1	PPL1	13	3/4" 2#12 & 1#12GND	X				X			NOTE 3
UH-7	UNIT HEATER	CHEMICALS	EX_110	0.00 hp	0 A	0.00 W	120 V	1	PP-1 RIGHT	13	3/4" 2#12 & 1#12GND								

MECHANICAL EQUIPMENT SCHEDULE NOTES:

1. STARTERS, VFD'S AND DISCONNECT SWITCHES SHALL BE FURNISHED BY THE MECHANICAL CONTRACTOR, INSTALLED AND WIRED BY THE ELECTRICAL CONTRACTOR
2. STARTERS, VFD'S AND DISCONNECT SWITCHES SHALL BE FURNISHED AS PART OF THE MECHANICAL EQUIPMENT FURNISHED AND INSTALLED BY THE MECHANICAL CONTRACTOR, WIRED BY THE ELECTRICAL CONTRACTOR.
3. STARTERS, VFD'S AND DISCONNECTS SHALL BE FURNISHED, INSTALLED AND WIRED BY THE ELECTRICAL CONTRACTOR.
4. ELECTRICAL CONTRACTOR SHALL COORDINATE EXACT FUSE SIZE AND OVERCURRENT PROTECTION FOR ALL MECHANICAL EQUIPMENT WITH MANUFACTURERS RECOMMENDATIONS.

CHEMICAL FEED AND TRANSFER PUMP EQUIPMENT SCHEDULE

NO.	DESCRIPTION	LOCATION NAME	LOCATION NUMBER	LOAD HP	LOAD A	LOAD W	VOLT	PHASE	Panel	Circuit Number	CONDUIT & WIRE SIZE	THERMAL MOTOR SWITCH	MOTOR STARTER	VFD	RECEPTACLE	JUNCTION BOX	NON-FUSED DISCONNECT	FUSED DISCONNECT	NOTES
FP-101	CHEMICAL FEED PUMP	CHEMICALS	EX_110	0.00 hp	0 A	1500.00 W	120 V	1	PP-1 RIGHT	15	3/4" 2#12 & 1#12GND				X				
FP-102	CHEMICAL FEED PUMP	CHEMICALS	EX_110	0.00 hp	0 A	1500.00 W	120 V	1	PP-1 RIGHT	16	3/4" 2#12 & 1#12GND				X				
FP-201	CHEMICAL FEED PUMP	CHEMICALS	EX_110	0.00 hp	0 A	1500.00 W	120 V	1	PP-1 RIGHT	18	3/4" 2#12 & 1#12GND				X				
FP-202	CHEMICAL FEED PUMP	CHEMICALS	EX_110	0.00 hp	0 A	1500.00 W	120 V	1	PP-1 RIGHT	17	3/4" 2#12 & 1#12GND				X				
TP-101	CHEMICAL TRANSFER PUMP	CHEMICALS	EX_110	0.00 hp	0 A	1500.00 W	120 V	1	PP-1 RIGHT	14	3/4"C., 2#12 & 1#12GND				X				
TP-201	CHEMICAL TRANSFER PUMP TP-201	CHEMICALS	EX_110	0.00 hp	0 A	1500.00 W	120 V	1	PP-1 RIGHT	19	3/4" 2#12 & 1#12GND				X				

CHEMICAL FEED EQUIPMENT SCHEDULE NOTES:

1. ALL CHEMICAL FEED EQUIPMENT IS LOCATED IN THE EXISTING BUILDING.
2. CONTACTOR TO PROVIDE ALL NEW CIRCUIT BREAKERS WITHIN EXISTING PANEL. NEW BREAKERS SHALL MATCH EXISTING IN STYLE AND AIC RATING

Panel ID: PP-1 RIGHT
Voltage: 208Y/120
Phase/Wire: 3/4
Fed From:
Location: GENERATOR/ ELECTRICAL EX_109

MCB Rating: 200 A
A.I.C. Rating: 10,000 AMPS SYMMETRICAL
Manufacturer:

CKT	DESCRIPTION	CB Size	Poles	A		B		C		Poles	CB Size	DESCRIPTION	CKT
1	EXISTING	20 A	1	0.0	0.0					1	20 A	EXISTING	2
3	EXISTING	20 A	1			0.0	0.0			1	20 A	EXISTING	4
5	EXISTING	20 A	1					0.0	0.0	1	20 A	EXISTING	6
7	EXISTING	20 A	1	0.0	0.0					1	20 A	EXISTING	8
9	EXISTING	20 A	1			0.0	0.0			1	20 A	EXISTING	10
11	EXISTING	20 A	1					0.0	0.0	1	20 A	EXISTING	12
13	UNIT HEATER UH-7	20 A	1	0.6	1.5					1	20 A	TP-101	14
15	FP-101	20 A	1			1.5	1.5			1	20 A	FP-102	16
17	FP-202	20 A	1					1.5	1.5	1	20 A	FP-201	18
19	TP-201	20 A	1	1.5	0.0					1	20 A	SCADA PANEL	20
21													22
23													24
25													26
27													28
29													30
31													32
33													34
35													36
37													38
39													40
41													42
	Total kVA:			3.6 kVA		3.0 kVA		3.0 kVA					

Total Connected Load (kVA) 9.6 kVA
Total Connected Current (Amps) 27 A

EXISTING PANEL LOCATED IN EXISTING BUILDING ELECTRICAL ROOM

Project:

TOWN OF BLACKSTONE,
MASSACHUSETTS DEPARTMENT OF PUBLIC WORKS

BLCKSTONE WATER TREAMENT PLAN

53 ELM STREET, BLACKSTONE, MASSACHUSETTS, 01504

Weston & Sampson

Weston & Sampson Engineers, Inc.
55 Walkers Brook Drive, Suite 100
Reading, MA 01867
978.532.1900 800.SAMPSON

www.westonandsampson.com

Consultants:

Revisions:

No.	Date	Description

COA:

©COPYRIGHT ©2021 BY WESTON & SAMPSON
THIS DRAWING HAS BEEN PREPARED FOR THE EXCLUSIVE USE OF THE CLIENT & PROJECT NAME LISTED ON THIS DRAWING ONLY.

REPRODUCTION, RELEASE OF UTILIZATION OF THE DRAWING CONTENT BY OTHER CLIENTS / FIRMS AND ON OTHER PROJECTS IS PROHIBITED BY LAW.

WESTON & SAMPSON RETAINS THE EXCLUSIVE USE OF THE INTELLECTUAL PROPERTY CONTAINED HEREIN.

Seal:

COMMONWEALTH OF MASSACHUSETTS
ROBERT F. MCALEER
ELECTRICAL
No. 48017
REGISTERED
PROFESSIONAL ENGINEER

Issued For:

BID DOCUMENTS

Scale: 1/2" = 1'-0"

Key Plan:

NORTH

Date:	05/19/2021
Drawn By:	DNM
Reviewed By:	RFM
Approved By:	RFM
W&S Project No.:	ENG20-0740
W&S File No.:	TBD

Drawing Title:

ELECTRICAL SCHEDULES SHEET II

Sheet Number:

E603

C:\Users\marchand\OneDrive - WESTON & SAMPSON ENGINEERS, Inc\Documents\2200740_BlackstoneWTPDesign_Electrical_2020_MarchandD.rvt
5/27/2021 12:49:40 PM

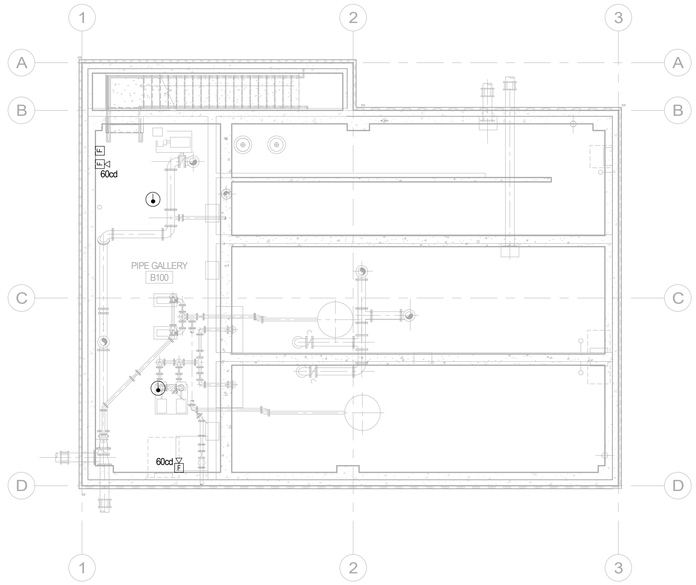

1 Overall - Fire Alarm Plan - B
1/8" = 1'-0"

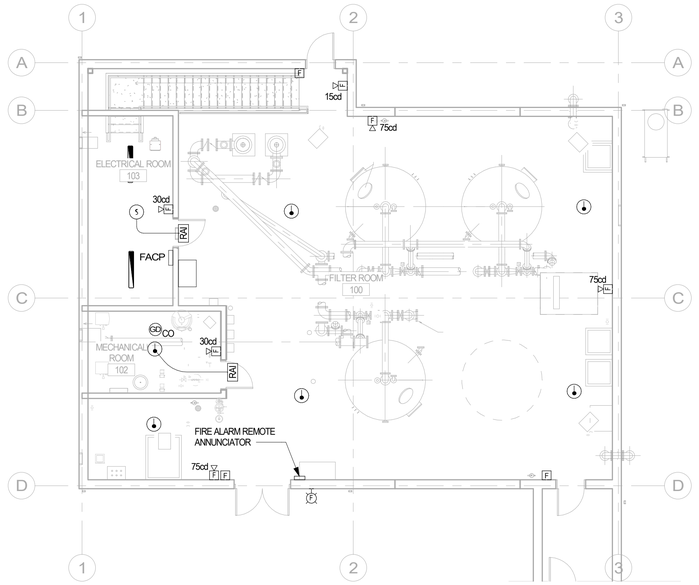

2 Overall-Fire Alarm Plan-01
1/8" = 1'-0"

FIRE ALARM LEGEND	
	FIRE ALARM SYSTEM HEAT DETECTOR (135°F RATE OF RISE)
F	FIRE ALARM SYSTEM HEAT DETECTOR. "F" INDICATES FIXED TEMPERATURE 190°F.
GD CO	CARBON MONOXIDE DETECTOR
2	FIRE ALARM SMOKE DETECTOR. "E" DENOTES ELEVATOR RECALL.
F	FIRE ALARM SYSTEM MANUAL PULL STATION
F 15	ADA COMPLIANT FIRE ALARM AUDIO/VISUAL ALARM DEVICE. NUMERAL SHOWN DENOTES CANDELA RATING.
RAI	FIRE ALARM REMOTE ALARM INDICATOR FOR LIMITED ACCESS SPACE SMOKE DETECTORS
FACP	FIRE ALARM CONTROL PANEL
F	FIRE ALARM SYSTEM EXTERIOR MOUNTED WEATHERPROOF RED ROTATING LOCATOR BEACON

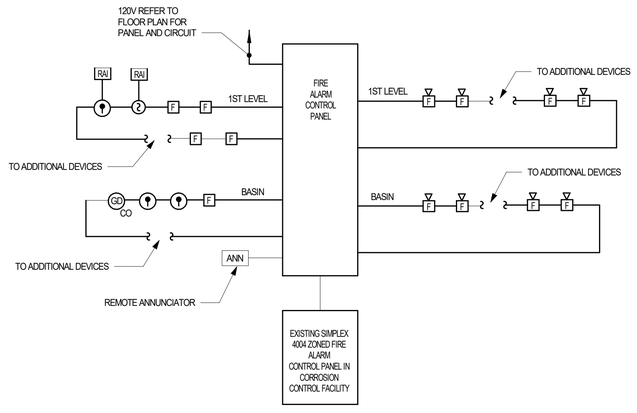

5 FIRE ALARM RISER DIAGRAM
NOT TO SCALE

FIRE ALARM DIAGRAM NOTES

1. REFER TO THE FLOOR PLANS FOR THE EXACT QUANTITY AND LOCATION OF EQUIPMENT.
2. ALL COMMON AREA PANELS OR EXTERIOR DEVICE LOCATIONS SHALL BE COORDINATED WITH THE ARCHITECT AND TOWN FIRE OFFICIALS.
3. DISTRIBUTOR SHALL PROVIDE AN INSTALLATION WIRING DIAGRAM SHOWING EACH AND EVERY DEVICE.
4. EXACT WIRING SHALL BE PER MANUFACTURER'S REQUIREMENTS.
5. WIRING FOR INITIATION AND NOTIFICATION CIRCUITS SHALL BE CLASS A" UNLESS OTHERWISE NOTED.
6. MINIMUM WIRE SIZE SHALL BE #18 AWG. (ADDRESSABLE LOOP) #16 AWG FOR HORN AND LIGHT CIRCUITS. LARGER CONDUCTORS SHALL BE PROVIDED IF SO SPECIFIED BY THE MANUFACTURER.
7. EACH INITIATING DEVICE CONNECTED TO THE ADDRESSABLE LOOP SHALL BE ANNUNCIATED SEPARATELY.
8. ADDRESSABLE LOOP SHALL BE DESIGNED WITH 30% SPARE CAPACITY (ANALOG AND MONITOR/CONTROL POINTS).
9. HORNS AND STROBE LIGHTS SHALL BE SYNCHRONIZED. EACH CIRCUIT DESIGNED WITH 30% SPARE CAPACITY. HORN SILENCE CAPABILITY SHALL BE PROVIDED IF REQUIRED BY THE AHJ.
10. NEW FIRE ALARM CONTROL PANEL SHALL BE TIED INTO THE EXISTING CONTROL PANEL ON ZONE 7.
11. ADD ADDITIONAL ZONE CARD TO THE EXISTING FIRE ALARM CONTROL PANEL AS REQUIRED FOR TIE IN OF THE NEW FIRE ALARM CONTROL PANEL.

DRAWING NOTES:

1. REFER TO FA001 FOR LEGEND, GENERAL NOTES AND RISER DIAGRAM.
2. REFER TO E001 FOR ABBREVIATIONS AND ADDITIONAL GENERAL NOTES.
3. ELECTRICAL CONTRACTOR SHALL COORDINATE WITH THE GAS DETECTION SYSTEM VENDOR TO FURNISH AND INSTALL ALL CONDUIT AND MOUNTING BOXES. WIRING AND DEVICES SHALL BE FURNISHED, INSTALLED AND FINAL CONNECTIONS MADE BY THE GAS DETECTION VENDOR.

0 4' 8' 16'

Project:
TOWN OF BLACKSTONE, MASSACHUSETTS DEPARTMENT OF PUBLIC WORKS
BLCKSTONE WATER TREAMENT PLAN
53 ELM STREET, BLACKSTONE, MASSACHUSETTS, 01504

Weston & Sampson
Weston & Sampson Engineers, Inc.
55 Walkers Brook Drive, Suite 100
Reading, MA 01867
978.532.1900 800.SAMPSON
www.westonandsampson.com

Consultants:

Revisions:

No.	Date	Description

COA:
"COPYRIGHT ©2021 BY WESTON & SAMPSON
THIS DRAWING HAS BEEN PREPARED FOR THE EXCLUSIVE USE OF THE CLIENT & PROJECT NAME LISTED ON THIS DRAWING ONLY.
REPRODUCTION, RELEASE OF UTILIZATION OF THE DRAWING CONTENT BY OTHER CLIENTS / FIRMS AND ON OTHER PROJECTS IS PROHIBITED BY LAW.
WESTON & SAMPSON RETAINS THE EXCLUSIVE USE OF THE INTELLECTIAL PROPERTY CONTAINED HEREIN.

Seal:
COMMONWEALTH OF MASSACHUSETTS
ROBERT F. McALEER ELECTRICAL No. 48017 REGISTERED PROFESSIONAL ENGINEER

Issued For:
BID DOCUMENTS

Scale: 1/8" = 1'-0"

Key Plan:

NORTH

Date:	05/21/2021
Drawn By:	DNM
Reviewed By:	RFM
Approved By:	RFM
W&S Project No.:	ENG20-0740
W&S File No.:	TBD

Drawing Title:
FIRE ALARMS PLANS

Sheet Number:
FA101

5/27/2021 2:12:17 PM C:\Users\marchandd\OneDrive - WESTON & SAMPSON ENGINEERS, Inc\Documents\200740_BlackstoneWTPDesign_Electrical_2020_MarchandD.rvt

INSTRUMENT SYMBOLS

- LOCALLY MOUNTED
- REAR OF PANEL OR RACK MOUNTED
- FRONT OF PANEL MOUNTING (PRIMARY LOCATION)
- FRONT OF PANEL MOUNTING (AUXILIARY LOCATION)
- INSTRUMENTS SHARING COMMON HOUSING
- PROCESS INTERLOCK
- SHARED DISPLAY FUNCTION (BLIND)
- SHARED DISPLAY FUNCTION (OPERATOR ACCESS PRIMARY LOCATION)
- SHARED DISPLAY FUNCTION (OPERATOR ACCESS AUXIILIARY LOCATION)
- COMPUTER FUNCTION (BLIND)
- COMPUTER FUNCTION (OPERATOR ACCESS PRIMARY LOCATION)
- COMPUTER FUNCTION (OPERATOR ACCESS AUXILIARY LOCATION)
- PLC LOGIC FUNCTION (BLIND)
- PLC LOGIC FUNCTION (OPERATOR ACCESS PRIMARY LOCATION)
- PLC LOGIC FUNCTION (OPERATOR ACCESS AUXHILIARY LOCATION)
- PERSONAL SAFETY ALARM PUSH BUTTON (AIL) OR EMERGENCY STOP PUSH BUTTON (RIL)
- AIL – AMBER INDICATING LIGHT
BIL – BLUE INDICATING LIGHT
GIL – GREEN INDICATING LIGHT
RIL – RED INDICATING LIGHT
WIL – WHITE INDICATING LIGHT
- ALARM ACTIVATED HORN
- RFBH — RED FLASHING BEACON HORN
- DO — DIGITAL OUTPUT
- DI — DIGITAL INPUT
- AO — ANALOG OUTPUT
- AI — ANALOG INPUT

HAND SWITCHES

HS 100 — SPECIFIC SWITCH FUNCTION, (TYP.) — LOOP NUMBER

- AO–AUTO/OFF
- AM–AUTO/MANUAL
- ES–EMERGENCY STOP
- FOR–FORWARD/OFF/REVERSE
- FS–FAST/SLOW
- FOS–FAST/OFF/SLOW
- HOA–HAND/OFF/AUTO
- HOR–HAND/OFF/REMOTE
- LOR–LOCAL/OFF/REMOTE
- LOS–LOCKOUT/STOP
- LR–LOCAL/REMOTE
- OC–OPEN/CLOSE
- OCA–OPEN/CLOSE/AUTO
- OSC–OPEN/STOP/CLOSE
- OO–ON/OFF
- SS–START/STOP
- SOR–START/OFF/RESET

HS ##A — HOA / VFD

LYH 100 — ISP

LSH ## — M

INSTRUMENTATION IDENTIFICATION LETTERS

FIRST–LETTER			SUCCEEDING–LETTERS		
SYMBOL	MEASURED OR INITIATING VARIABLE	MODIFIER	READOUT OR PASSIVE FUNCTION	OUTPUT FUNCTION	MODIFIER
A	ANALYSIS	–	ALARM	–	–
B	BURNER, COMBUSTION	–	–	–	–
C	–	–	–	CONTROL	–
D	–	DIFFERENTIAL	–	–	–
E	VOLTAGE	–	SENSOR (PRIMARY ELEMENT)	–	–
F	FLOW RATE	RATIO (FRACTION)	–	–	–
G	–	–	GLASS, VIEWING DEVICE	–	–
H	HAND	–	–	–	HIGH
I	CURRENT (ELECTRICAL)	–	INDICATE	–	–
J	POWER	SCAN	–	–	–
K	TIME, TIME SCHEDULE	TIME RATE OF CHANGE	–	CONTROL STATION	–
L	LEVEL	–	LIGHT	–	LOW
M	–	MOMENTARY	–	–	MIDDLE, INTERMEDIATE
N	–	–	–	–	–
O	–	–	ORIFICE, RESTRICTION	–	–
P	PRESSURE, VACUUM	–	POINT (TEST) CONNECTION	–	–
Q	QUANTITY	INTEGRATE, TOTALIZE	–	–	–
R	RADIATION	–	RECORD	–	
S	SPEED, FREQUENCY	SAFETY	–	SWITCH	–
T	TEMPERATURE	–	–	TRANSMIT	–
U	MULTIVARIABLE	–	MULTIFUNCTION	MULTIFUNCTION	MULTIFUNCTION
V	VIBRATION, MECHANICAL ANALYSIS	–	–	VALVE, DAMPER, LOUVER	–
W	WEIGHT, FORCE	–	WELL	–	–
X	UNCLASSIFIED	X AXIS	UNCLASSIFIED	UNCLASSIFIED	UNCLASSIFIED
Y	EVENT, STATE OR PRESENCE	Y AXIS	–	RELAY, COMPUTE, CONVERT	–
Z	POSITION, DIMENSION	Z AXIS	–	DRIVER, ACTUATOR, UNCLASSIFIED FINAL CONTROL ELEMENT	–

PRIMARY ELEMENTS

- AV — AUTOMATIC CONTROL VALVE
- FE / M — MAGNETIC FLOW METER
- FE — TURBINE FLOW METER
- FE — ULTRASONIC FLOW METER
- FE — ORIFICE FLOW METER
- FS — FLOW SWITCH
- LE — SUBMERSIBLE PRESSURE/LEVEL SENSOR
- LE — ULTRASONIC LEVEL SENSOR
- LS — PROBE LEVEL SENSOR
- PI — PRESSURE GAUGE
- PDI — PRESSURE DIFFERENTIAL GAUGE
- PS — PRESSURE SWITCH
- PT — PRESSURE TRANSMITTER
- TI — TEMPERATURE GAUGE
- TT — TEMPERATURE TRANSMITTER
- S — MOTORIZED SOLENOID VALVE
- M — MOTORIZED BUTTERFLY VALVE

INSTRUMENTATION DESIGNATIONS

A/B	SELECTOR SWITCH
AM	AUTO/MANUAL
CLR	CHLORINE RESIDUAL
ES	EMERGENCY STOP
ESD	EMERGENCY SHUT DOWN
F/R	FORWARD/REVERSE
HOA	HAND/OFF/AUTO
OCR	OPEN/CLOSE/REMOTE
OL	MOTOR OVERLOAD TRIP
O/O	ON OR OFF
pH	HYDROGEN ION CONCENTRATION
S/S	START STOP
S	START
TU	TURBIDITY
ESE	INDUSTRIAL ETHERNET SWITCH/HUB
FOC	FIBER OPTIC CONVERTER
PA	PERSONAL ALARM ILLUMINATED PUSHBUTTON
	EMERGENCY STOP ILLUMINATED PUSHBUTTON
	RED INDICATING LIGHT
HLS	HIGH LOW ANALOG SELECT
PSA	PERSONAL SAFETY ALARM
DO	DISSOLVED OXYGEN
NOX	NITRATE
SS	SUSPENDED SOLIDS
OIT	OPERATOR INTERFACE TERMINAL (LOCAL PANEL MOUNT HMI)
HMI	HUMAN MACHINE INTERFACE
PC	PERSONAL COMPUTER
LCP	LOCAL CONTROL PANEL
CP	CONTROL PANEL
PLC	PROGRAMMABLE LOGIC CONTROLLER
FO	FIBER OPTIC MEDIA

NOTES:

1. TAG ID NUMBERS SHALL BE PROVIDED ON INSTRUMENTS AND EQUIPMENT. RENUMBER COMPLETE FACILITY EQUIPMENT AND INSTRUMENTATION WITH TAG IDS, ENGRAVED LAMICOID WHITE ON BLACK.
2. ANALOG SIGNALS ARE 4–20MA DC UNLESS OTHERWISE NOTED.
3. ALL PROCESS AND PROGRAMMABLE LOGIC CONTROL FUNCTIONS ARE DETAILED IN THE SPECIIFCATION SECTION 40 93 00, 40 94 33, 40 94 43, AND 40 95 00. THE FOLLOWING SHEETS SCHEMATICALLY REPRESENT INSTRUMENTATION AND CONTROL.
4. PROVIDE COMPLETE SYSTEM INTEGRATION FOR EXISTING INSTRUMENTATION AND NEW INSTRUMENTATION SYSTEMS.
5. DEVICES MAY BE SUFFIXED "H" OR "L" TO DESIGNATE HIGH OR LOW ACTIVATION AND "HH" OR "LL" TO DESIGNATE HIGH–HIGH OR LOW–LOW ACTIVATION.
6. REFER TO MECHANICAL AND ELECTRICAL SHEETS FOR ADDITIONAL INSTRUMENTATION EQUIPMENT IDENTIFICATION, LINE SYMBOLS, ADDITIONAL ABBREVIATIONS AND INSTRUMENT TAGGING CONVENTIONS.
7. THIS IS A GENERAL P&ID LEGEND SHEET. SOME SYMBOLS OR NOTATIONS MAY NOT BE USED IN THIS PROJECT.
8. ALL NECESSARY MANUAL VALVES MAY NOT BE SHOWN ON THE P&ID'S FOR CLARITY. PROVIDE ISOLATION VALVES ON ALL SAMPLE LINES AND INSTRUMENT TUBING.
9. SEE PROCESS MECHANICAL SHEETS FOR INSTRUMENT AND EQUIPMENT LOCATIONS AND ADDITIONAL INSTALLATION DETAILS.
10. ALL REQUIRED CONDUIT, WIRING, TERMINATIONS, RECEPTACLES, CONNECTORS, PATCH PANELS, AND OTHER COMPONENTS NOT PROVIDED BY THE UTILITY SHALL BE PROVIDED AND INSTALLED BY THE CONTRACTOR.
11. ELECTRICAL CONTRACTOR SHALL FURNISH AND INSTALL ALL CONDUIT AND CABLE FOR INSTRUMENTATION, CONTROLS AND COMMUNICATION UNLESS OTHERWISE NOTED.
12. ELECTRICAL CONTRACTOR SHALL DISCONNECT POWER AND RECONNECT POWER FOR ALL PANELS TO BE MODIFIED. COORDINATE WITH INSTRUMENTATION SYSTEM SUPPLIER.

INSTRUMENT LINE SYMBOLS

- CONNECTION TO PROCESS OR INSTRUMENT IMPULSE LINE
- INSTRUMENT PNEUMATIC SIGNAL LINE (3–15 PSIG UNLESS NOTED OTHERWISE)
- INSTRUMENT ELECTRONIC SIGNAL LINE (CURRENT OR VOLTAGE AS NOTED ON SPEC SHEETS)
- FIELD TUBING OR CAPILLARY FOR THERMAL ELEMENTS AND PRESSURE SEALS
- INTERNAL SYSTEM LINK (SOFTWARE OR DATA LINK)
- UNGUIDED ELECTROMAGNETIC OR SONIC SIGNAL
- HEAT TRACED LINE
- RS232/RS485 SERIAL
- POWER
- INSTRUMENTATION
- ETH — ETHERNET
- FO — FO — FIBER OPTIC MEDIA
- V — VENDOR–SUPPLIED CABLE
- L - — LOCAL CONNECTION (NO CABLE)

Project:

TOWN OF BLACKSTONE, MASSACHUSETTS
DEPARTMENT OF PUBLIC WORKS

WATER TREATMENT PLANT

53 ELM STREET, BLACKSTONE, MASSACHUSETTS, 01504

Weston & Sampson

Weston & Sampson Engineers, Inc.
55 Walkers Brook Drive
Reading, MA, 01867
978.532.1900 800.SAMPSON
www.westonandsampson.com

Consultants:

Revisions:

No.	Date	Description

Seal:

COA:
COPYRIGHT © 2019 BY WESTON & SAMPSON
THIS DRAWING HAS BEEN PREPARED FOR THE EXCLUSIVE USE OF THE CLIENT & PROJECT NAME LISTED ON THIS DRAWING ONLY.

REPRODUCTION, RELEASE OF UTILIZATION OF THE DRAWING CONTENT BY OTHER CLIENTS / FIRMS AND ON OTHER PROJECTS IS PROHIBITED BY LAW.

WESTON & SAMPSON RETAINS THE EXCLUSIVE USE OF THE INTELLECTUAL PROPERTY CONTAINED HEREIN.

Issued For:

BID DOCUMENTS

Scale:	AS NOTED
Date:	2/24/2021
Drawn By:	DGF
Reviewed By:	SHK
Approved By:	DGF
W&S Project No.:	2200740
W&S File No.:	-

Drawing Title:

PROCESS NOTES, ABBREVIATIONS & LEGEND

Sheet Number:

Q000

COPYRIGHT 2019 WESTON & SAMPSON

\\wse03.local\WSE Projects\MA\Blackstone MA\2200740 WTP Design\CAD\Blackstone - Instrumentation Drawings.dwg

Rev: 1.6 Date: 04/10/2019

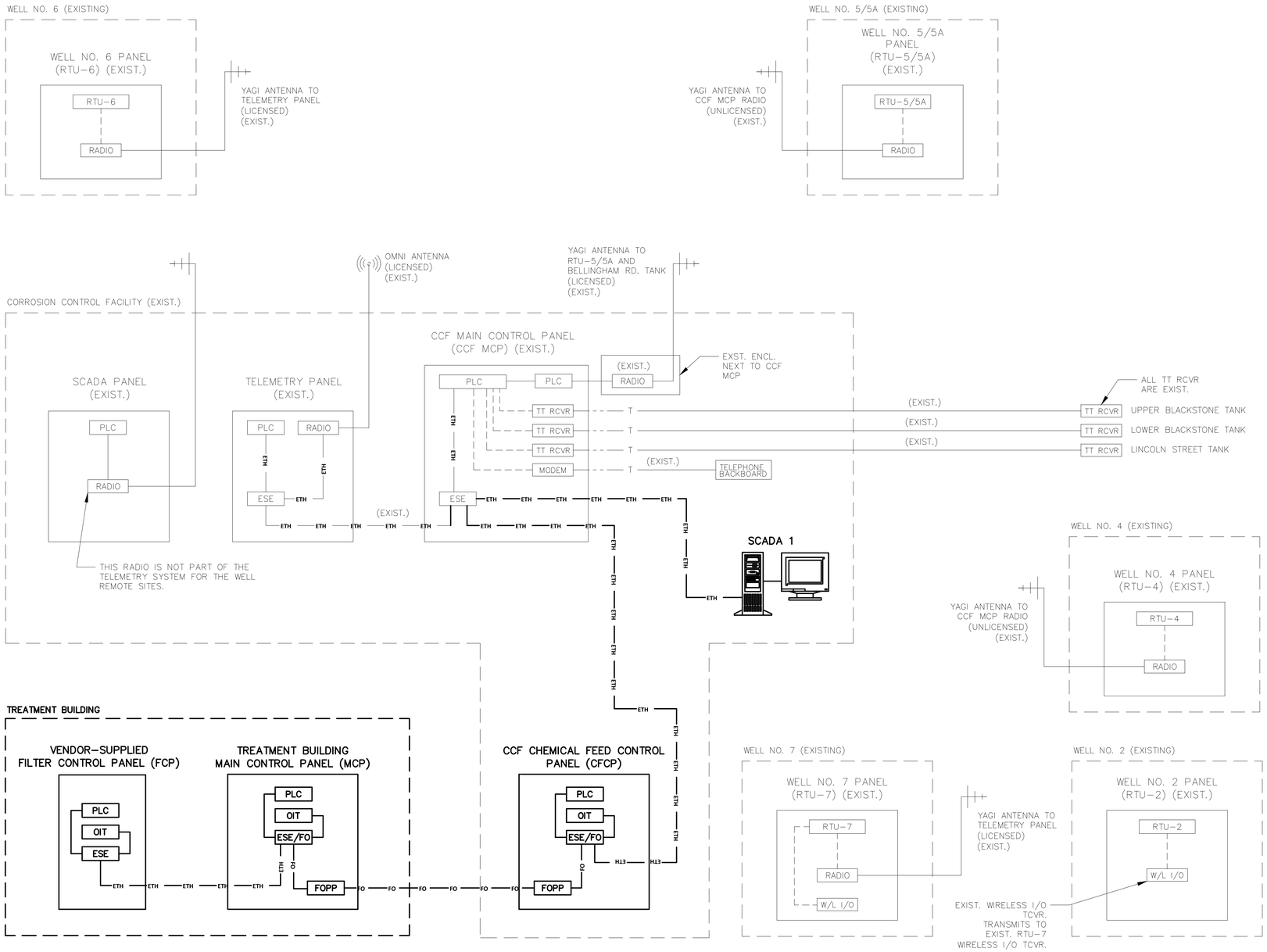

SCADA NETWORK DIAGRAM

SCALE: NTS

INSTRUMENT LINE SYMBOLS

- CONNECTION TO PROCESS OR INSTRUMENT IMPULSE LINE
- INSTRUMENT PNEUMATIC SIGNAL LINE (3–15 PSIG UNLESS NOTED OTHERWISE)
- INSTRUMENT ELECTRONIC SIGNAL LINE (CURRENT OR VOLTAGE AS NOTED ON SPEC SHEETS)
- FIELD TUBING OR CAPILLARY FOR THERMAL ELEMENTS AND PRESSURE SEALS
- INTERNAL SYSTEM LINK (SOFTWARE OR DATA LINK)
- UNGUIDED ELECTROMAGNETIC OR SONIC SIGNAL
- HEAT TRACED LINE
- RS232/RS485 SERIAL
- POWER
- ENET — ETHERNET
- FO — FIBER OPTIC MEDIA
- C/DSL — CABLE/DSL
- T — ANALOG PHONE COMM
- ISP — HIGH SPEED INTERNET SERVICE PROVIDER VENDOR HARDWARE
- IPC — INDUSTRIAL PANEL-MOUNT PC
- OIT — OPERATOR INTERFACE TERMINAL
- ESE/FO — INDUSTRIAL ETHERNET SWITCH WITH FIBER PORTS
- ESE — INDUSTRIAL ETHERNET SWITCH
- ANTENNA (YAGI DIRECTIONAL)
- ANTENNA (OMNI DIRECTIONAL)
- FOPP — FIBER OPTIC PATCH PANEL
- FOMC — FIBER OPTIC MEDIA CONVERTER
- RADIO — RADIO MODEM
- MODEM — TELEPHONE LINE MODEM
- TT RCVR — TONE TELEMETRY RECEIVER
- W/L I/O — WIRELESS I/O TRANSCEIVER

NOTES:

1. COORDINATE INSTRUMENTATION WIRING TO RUN IN ELECTRICAL DUCTBANKS WHERE EVER POSSIBLE.
2. PRIOR TO INSTALLATION COORDINATE THE ELECTRICAL, MECHANICAL AND INSTRUMENTATION DRAWINGS. REPORT ANY DISCREPANCIES TO THE ENGINEER IMMEDIATELY.
3. INSTRUMENT CABLES SHALL BE PROVIDED WITH THE INSTRUMENTS BY THE INSTRUMENT MANUFACTURER. SUFFICIENT LENGTH OF CABLE SHALL BE REQUESTED BY THE CONTRACTOR. INSTRUMENT CABLE SHALL BE INSTALLED IN A MINIMUM 3/ 4" CONDUIT. CONDUIT SIZE SHALL BE SIZE SHALL BE INCREASED AS NECESSARY OR RECOMMENDED BY THE MANUFACTURER.

Project:

TOWN OF BLACKSTONE, MASSACHUSETTS DEPARTMENT OF PUBLIC WORKS

WATER TREATMENT PLANT

53 ELM STREET, BLACKSTONE, MASSACHUSETTS, 01504

Weston & Sampson

Weston & Sampson Engineers, Inc.
55 Walkers Brook Drive
Reading, MA, 01867
978.532.1900 800.SAMPSON
www.westonandsampson.com

Consultants:

Revisions:

No.	Date	Description

Seal:

COA:
COPYRIGHT © 2019 BY WESTON & SAMPSON
THIS DRAWING HAS BEEN PREPARED FOR THE EXCLUSIVE USE OF THE CLIENT & PROJECT NAME LISTED ON THIS DRAWING ONLY.

REPRODUCTION, RELEASE OF UTILIZATION OF THE DRAWING CONTENT BY OTHER CLIENTS / FIRMS AND ON OTHER PROJECTS IS PROHIBITED BY LAW.

WESTON & SAMPSON RETAINS THE EXCLUSIVE USE OF THE INTELLECTUAL PROPERTY CONTAINED HEREIN.

Issued For:

BID DOCUMENTS

Scale:	AS NOTED
Date:	2/24/2021
Drawn By:	DGF
Reviewed By:	SHK
Approved By:	DGF
W&S Project No.:	2200740
W&S File No.:	-

Drawing Title:

CONTROL NETWORK DIAGRAM

Sheet Number:

Q100

COPYRIGHT 2019 WESTON & SAMPSON

\\wes03.local\WSE\Projects\MA\Blackstone MA\2200740 WTP Design\CAD\blackstone - instrumentation Drawings.dwg
Rev: 1.6 Date: 04/10/2019

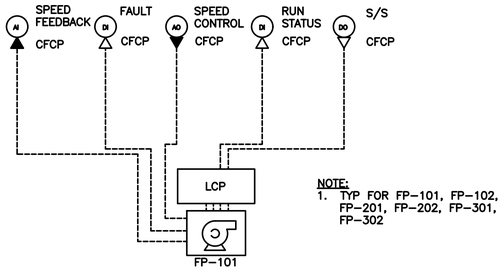

CHEMICAL METERING PUMP DETAIL

N.T.S.

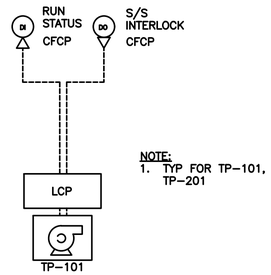

TRANSFER PUMP DETAIL

N.T.S.

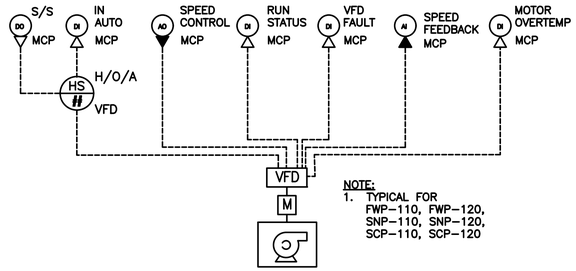

VARIABLE SPEED PUMP DETAIL

N.T.S.

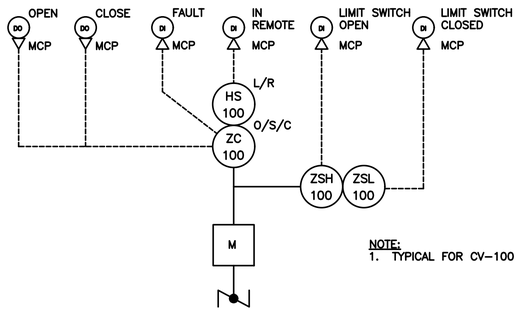

OPEN/CLOSE MOTORIZED BUTTERFLY VALVE DETAIL

N.T.S.

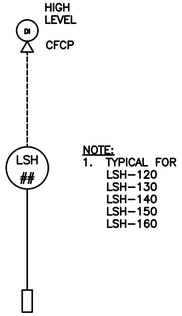

FLOAT LEVEL SWITCH AND CHEMICAL SPILL SWITCH DETAIL

N.T.S.

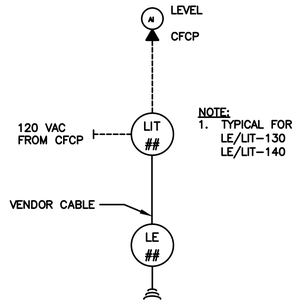

ULTRASONIC LEVEL DETAIL

N.T.S.

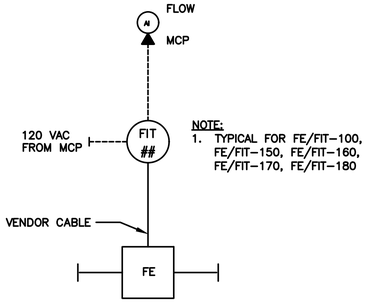

FLOWMETER DETAIL

N.T.S.

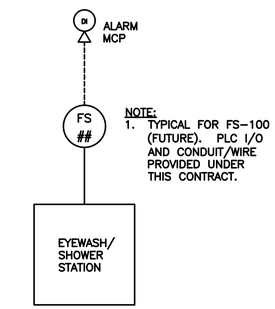

EYEWASH/SHOWER DETAIL

N.T.S.

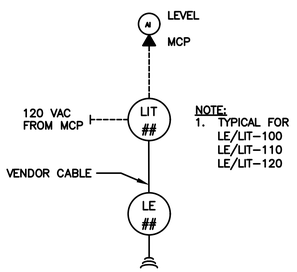

ULTRASONIC LEVEL DETAIL

N.T.S.

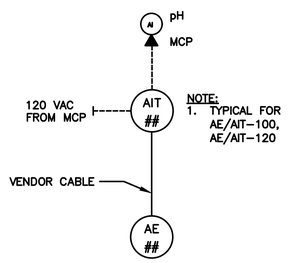

pH ANALZYER DETAIL

N.T.S.

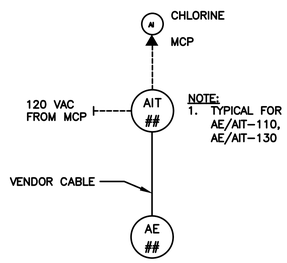

CHLORINE ANALZYER DETAIL

N.T.S.

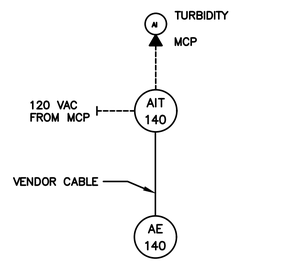

TURBIDITY ANALZYER DETAIL

N.T.S.

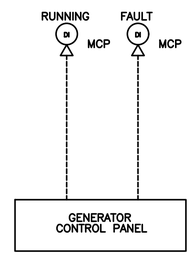

GENERATOR DETAIL

FOR NEW TREATMENT BLDG. AND EXISTING CCF.

N.T.S.

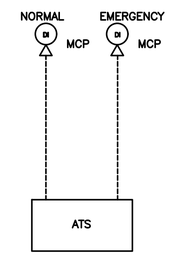

ATS DETAIL

FOR NEW TREATMENT BLDG. AND EXISTING CCF.

N.T.S.

Project:

TOWN OF BLACKSTONE, MASSACHUSETTS
DEPARTMENT OF PUBLIC WORKS

WATER TREATMENT PLANT

53 ELM STREET, BLACKSTONE, MASSACHUSETTS, 01504

Weston & Sampson

Weston & Sampson Engineers, Inc.
55 Walkers Brook Drive
Reading, MA, 01867
978.532.1900 800.SAMPSON
www.westonandsampson.com

Consultants:

Revisions:

No.	Date	Description

Seal:

COA:
COPYRIGHT © 2019 BY WESTON & SAMPSON
THIS DRAWING HAS BEEN PREPARED FOR THE EXCLUSIVE USE OF THE CLIENT & PROJECT NAME LISTED ON THIS DRAWING ONLY.

REPRODUCTION, RELEASE OF UTILIZATION OF THE DRAWING CONTENT BY OTHER CLIENTS / FIRMS AND ON OTHER PROJECTS IS PROHIBITED BY LAW.

WESTON & SAMPSON RETAINS THE EXCLUSIVE USE OF THE INTELLECTUAL PROPERTY CONTAINED HEREIN.

Issued For:

BID DOCUMENTS

Scale:	AS NOTED
Date:	2/24/2021
Drawn By:	DGF
Reviewed By:	SHK
Approved By:	DGF
W&S Project No.:	2200740
W&S File No.:	-

Drawing Title:

WTP AND WELLS CONTROL DIAGRAMS I

Sheet Number:

Q111

COPYRIGHT 2019 WESTON & SAMPSON

\\wes03.local\WSE\Projects\MA\Blackstone MA\2200740 WTP Design\CAD\blackstone - Instrumentation Drawings.dwg

Rev: 1.6 Date: 04/10/2019

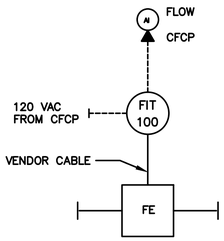

CCF – FLOWMETER DETAIL

N.T.S.

NEW EFFLUENT FLOW METER IN CCF PIPE PIT.

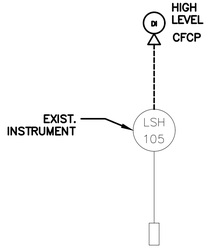

CCF – PIPE PIT FLOAT LEVEL SWITCH DETAIL

N.T.S.

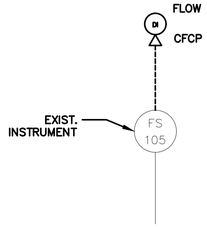

CCF – PIPE PIT PIPE FLOW SWITCH DETAIL

N.T.S.

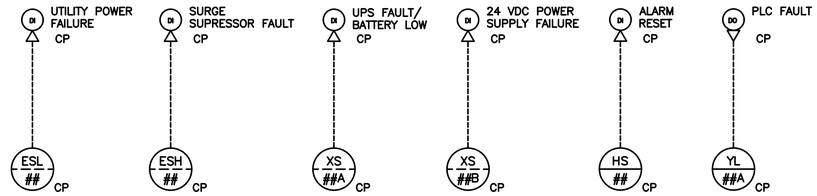

NOTE:
1. MCP ## = 010
AND CP = MCP
CFCP ## = 020
AND CP = CPCP

MCP AND CFCP MONITORING DETAIL

N.T.S.

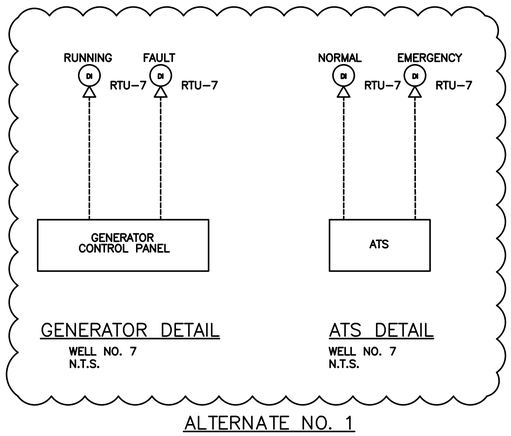

GENERATOR DETAIL

WELL NO. 7
N.T.S.

ATS DETAIL

WELL NO. 7
N.T.S.

ALTERNATE NO. 1

FILTER TAG ID SCHEDULE

ITEM	FILTER–110	FILTER–120	FILTER–130
RAW WATER FLOW CONTROL VALVE	FCV–110	FCV–120	FCV–130
FILTERED WATER CONTROL VALVE	OCV–111	OCV–121	OCV–131
BACKWASH SUPPLY CONTROL VALVE	OCV–112	OCV–122	OCV–132
BACKWASH WASTE CONTROL VALVE	OCV–113	OCV–123	OCV–133
FILTER TO WASTE CONTROL VALVE	OCV–114	OCV–124	OCV–134
AIR PRESSURIZING CONTROL VALVE	ACV–115	ACV–125	ACV–135
AIR WASH CONTROL VALVE	ACV–116	ACV–126	ACV–136
DRAIN DOWN CONTROL VALVE	OCV–117	OCV–127	OCV–137
FLOW METER	FE/FIT–110	FE/FIT–120	FE/FIT–130
PRESSURE DIFFERENTIAL INSTRUMENT	PDIT–110	PDIT–120	PDIT–130

NOTE:
AIR WASH VALVES ACV–116, ACV–126 AND ACV–136 ARE FUTURE.
DRAIN DOWN VALVES OCV–117, OCV–127 AND OCV–137 ARE FUTURE.

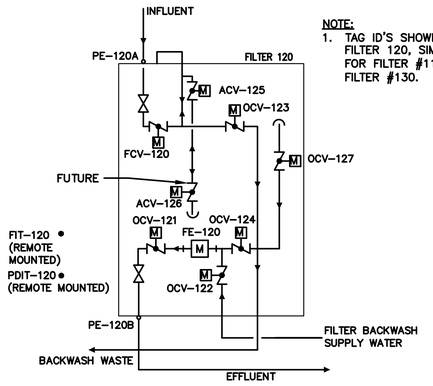

NOTE:
1. TAG ID'S SHOWN FOR FILTER 120, SIMILAR FOR FILTER #110 AND FILTER #130.

FILTER INSTRUMENTATION SCHEMATIC

N.T.S.

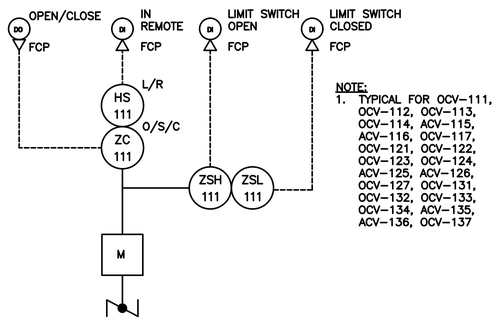

NOTE:
1. TYPICAL FOR OCV–111, OCV–112, OCV–113, OCV–114, ACV–115, ACV–116, OCV–117, OCV–121, OCV–122, OCV–123, OCV–124, ACV–125, ACV–126, OCV–127, OCV–131, OCV–132, OCV–133, OCV–134, ACV–135, ACV–136, OCV–137

FILTER OPEN/CLOSE MOTORIZED BUTTERFLY VALVE DETAIL

N.T.S.

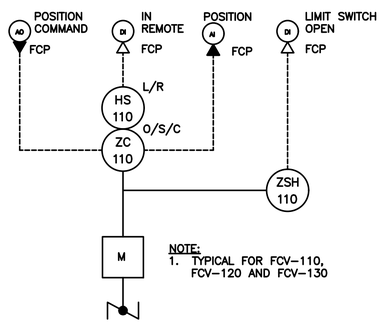

NOTE:
1. TYPICAL FOR FCV–110, FCV–120 AND FCV–130

FILTER OPEN/CLOSE MOTORIZED BUTTERFLY VALVE DETAIL

N.T.S.

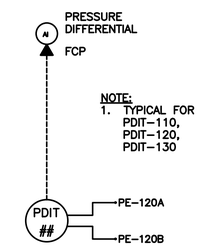

NOTE:
1. TYPICAL FOR PDIT–110, PDIT–120, PDIT–130

FILTER PRESSURE DIFFERENTIAL DETAIL

N.T.S.

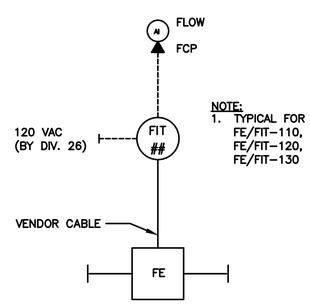

NOTE:
1. TYPICAL FOR FE/FIT–110, FE/FIT–120, FE/FIT–130

FILTER FLOWMETER DETAIL

N.T.S.

Project:

TOWN OF BLACKSTONE, MASSACHUSETTS
DEPARTMENT OF PUBLIC WORKS

WATER TREATMENT PLANT

53 ELM STREET, BLACKSTONE, MASSACHUSETTS, 01504

Weston & Sampson

Weston & Sampson Engineers, Inc.
55 Walkers Brook Drive
Reading, MA, 01867
978.532.1900 800.SAMPSON
www.westonandsampson.com

Consultants:

Revisions:

No.	Date	Description

Seal:

COA:
COPYRIGHT © 2019 BY WESTON & SAMPSON
THIS DRAWING HAS BEEN PREPARED FOR THE EXCLUSIVE USE OF THE CLIENT & PROJECT NAME LISTED ON THIS DRAWING ONLY.

REPRODUCTION, RELEASE OF UTILIZATION OF THE DRAWING CONTENT BY OTHER CLIENTS / FIRMS AND ON OTHER PROJECTS IS PROHIBITED BY LAW.

WESTON & SAMPSON RETAINS THE EXCLUSIVE USE OF THE INTELLECTUAL PROPERTY CONTAINED HEREIN.

Issued For:

BID DOCUMENTS

Scale:	AS NOTED
Date:	2/24/2021
Drawn By:	DGF
Reviewed By:	SHK
Approved By:	DGF
W&S Project No.:	2200740
W&S File No.:	-

Drawing Title:

WTP AND WELLS CONTROL DIAGRAMS II

Sheet Number:

Q112

COPYRIGHT 2019 WESTON & SAMPSON

Rev: 1.6 Date: 04/10/2019

\\wse03.local\WS Projects\Mult\Blackstone MA\2200740 WTP Design\CAD\Blackstone - Instrumentation Drawings.dwg